Gaggenau

en User manual and installation instructions

BS45.111

Combi steam oven

Table of contents

USER MANUAL

1 Safety ... 2
2 Preventing material damage ... 5
3 Environmental protection and saving energy ... 6
4 Familiarising yourself with your appliance ... 7
5 Accessories ... 11
6 Before using for the first time ... 13
7 Basic operation ... 14
8 Timer functions ... 15
9 Long-term timer ... 17
10 Childproof lock ... 17
11 Automatic programmes ... 18
12 Individual recipes ... 19
13 Core temperature probe ... 20
14 Home Connect ... 22
15 Basic settings ... 24
16 Cleaning and servicing ... 27
17 Troubleshooting ... 33
18 Disposal ... 35
19 How it works ... 36
20 Customer Service ... 56
21 Declaration of Conformity ... 56

22 INSTALLATION INSTRUCTIONS ... 57
22.1 General installation instructions ... 57

⚠ 1 Safety

Observe the following safety instructions.

1.1 General information

- Read this instruction manual carefully.
- Keep the instruction manual and the product information safe for future reference or for the next owner.
- Do not connect the appliance if it has been damaged in transit.

1.2 Intended use

This appliance is designed only to be built into kitchen units. Read the special installation instructions.
Only a licensed professional may connect appliances without plugs. Damage caused by incorrect connection is not covered under the warranty.
Only use this appliance:

- To prepare meals and drinks.
- In private households and in enclosed spaces in a domestic environment.
- Up to an altitude of max. 4000 m above sea level.

1.3 Restriction on user group

This appliance may be used by children aged 8 or over and by people who have reduced physical, sensory or mental abilities or inadequate experience and/or knowledge, provided that they are supervised or have been instructed on how to use the appliance safely and have understood the resulting dangers.
Do not let children play with the appliance.
Children must not perform cleaning or user maintenance unless they are at least 15 years old and are being supervised.
Keep children under the age of 8 years away from the appliance and power cable.

1.4 Safe use

Always place accessories in the cooking compartment the right way round.
→ *"Accessories", Page 11*

⚠ WARNING – Risk of fire!

Combustible objects that are left in the cooking compartment may catch fire.

- ▸ Never store combustible objects in the cooking compartment.
- ▸ If smoke is emitted, the appliance must be switched off or the plug must be pulled out and the door must be held closed in order to stifle any flames.

Loose food remnants, fat and meat juices may catch fire.

- ▸ Before using the appliance, remove the worst of the food residues and remnants from the cooking compartment, heating elements and accessories.

Opening the appliance door creates a draught. Greaseproof paper may come into contact with the heating element and catch fire.

- ▸ Never place greaseproof paper loosely over accessories when preheating the appliance and while cooking.
- ▸ Always cut greaseproof paper to size and use a plate or baking tin to hold it down.

⚠ WARNING – Risk of burns!

The appliance and its parts that can be touched become hot during use.

- ▸ Caution should be exercised here in order to avoid touching heating elements.
- ▸ Young children under 8 years of age must be kept away from the appliance.

Accessories and cookware get very hot.

- ▸ Always use oven gloves to remove accessories or cookware from the cooking compartment.

When the cooking compartment is hot, any alcoholic vapours inside may catch fire.

- ▸ Only use small quantities of drinks with a high alcohol content in food.
- ▸ Open the appliance door carefully.

⚠ WARNING – Risk of scalding!

The accessible parts of the appliance become hot during operation.

- ▸ Never touch these hot parts.
- ▸ Keep children at a safe distance.

Hot steam may escape when you open the appliance door. Steam may not be visible, depending on the temperature.

- ▸ Open the appliance door carefully.
- ▸ Keep children at a safe distance.

If there is water in the cooking compartment when it is hot, this may create hot steam.

- ▸ Never pour water into the cooking compartment when the cooking compartment is hot.

⚠ WARNING – Risk of injury!

Scratched glass in the appliance door may develop into a crack.

- ▸ Do not use any harsh or abrasive cleaners or sharp metal scrapers to clean the glass on the oven door, as they may scratch the surface.

The appliance and its parts that can be touched may have sharp edges.

- ▸ Take care when handling and cleaning them.
- ▸ If possible, wear protective gloves.

The hinges on the appliance door move when the door is opened and closed, which could trap your fingers.

- ▸ Keep your hands away from the hinges.

The light emitted by LED lights is very dazzling, and can damage the eyes (risk group 1).

- ▸ Do not look directly into the switched on LED lights for longer than 100 seconds.

⚠ WARNING – Risk of electric shock!

Incorrect repairs are dangerous.

- ▸ Repairs to the appliance should only be carried out by trained specialist staff.
- ▸ Only use genuine spare parts when repairing the appliance.
- ▸ If the power cord of this appliance is damaged, it must be replaced with a special connection cable, which is available from the manufacturer or his Customer Service.

If the insulation of the power cord is damaged, this is dangerous.

- ▸ Never let the power cord come into contact with hot appliance parts or heat sources.
- ▸ Never let the power cord come into contact with sharp points or edges.
- ▸ Never kink, crush or modify the power cord.

An ingress of moisture can cause an electric shock.

- ▸ Do not use steam- or high-pressure cleaners to clean the appliance.

If the appliance or the power cord is damaged, this is dangerous.

- ▸ Never operate a damaged appliance.
- ▸ Never pull on the power cord to unplug the appliance. Always unplug the appliance at the mains.
- ▸ If the appliance or the power cord is damaged, immediately unplug the power cord or switch off the fuse in the fuse box.
- ▸ Call customer services. → *Page 56*

⚠ WARNING – Risk of suffocation!

Children may put packaging material over their heads or wrap themselves up in it and suffocate.

- ▸ Keep packaging material away from children.
- ▸ Do not let children play with packaging material.

Children may breathe in or swallow small parts, causing them to suffocate.

- ▸ Keep small parts away from children.
- ▸ Do not let children play with small parts.

1.5 Steam

Follow these instructions when using a steam function.

⚠ WARNING – Risk of scalding!

The water in the water tank may become very hot if you operate the appliance for long periods.

- ▸ Always empty the water tank after using the steam function.

Hot steam is generated in the cooking compartment.

- ▸ Do not reach into the cooking compartment when using steam.

Hot liquid may spill over the sides of the accessory when it is removed from the cooking compartment.

- ▸ Remove hot accessories with care and always wear oven gloves.

⚠ WARNING – Risk of fire!

Due to the hot surfaces, vapours from flammable liquids may catch fire in the cooking compartment (explosion). The appliance door may spring open. Hot steam and jets of flame may escape.

- ▸ Do not pour flammable liquids (e.g. alcoholic drinks) into the water tank.
- ▸ Only fill the water tank with water or with the descaling solution we have recommended.

⚠ WARNING – Risk of burns!

Hot steam may escape during operation.

- ▸ Do not touch the ventilation openings.
- ▸ Keep children away from the appliance.

1.6 Core temperature probe

Follow these safety instructions when using the core temperature probe.

⚠ WARNING – Risk of electric shock!

An incorrect core temperature probe may damage the insulation.

- ▸ Only use the core temperature probe that is suitable for this appliance.

1.7 Cleaning

Follow these safety instructions when cleaning the appliance.

⚠ WARNING – Risk of chemical burns!

The cleaning agent solution may cause chemical burns in the mouth, throat and eyes or on the skin.

- ▸ Follow the safety instructions on the packaging of the cleaning cartridges.
- ▸ Do not drink the cleaning agent solution.
- ▸ The cleaning agent solution must not come into contact with food.
- ▸ Clean the water tank in the dishwasher before you next use the appliance.
- ▸ Dispose of the empty cleaning cartridge along with your household waste in accordance with the regional regulations.

⚠ WARNING – Risk of scalding!

The descaling tablets may cause chemical burns in the mouth, throat, eyes and on the skin.

- ▸ Follow the safety instructions on the packaging of the descaling tablets.
- ▸ Avoid the skin coming into contact with the descaling tablets.
- ▸ Keep children away from the descaling tablets.

The descaling solution may cause chemical burns in the mouth, throat and eyes or on the skin.

- ▸ Avoid the skin coming into contact with the descaling solution.
- ▸ Keep children away from the descaling solution.
- ▸ Do not drink the descaling solution.
- ▸ The descaling solution must not come into contact with food.
- ▸ Clean the water tank in the dishwasher or thoroughly by hand before you next use the appliance.

2 Preventing material damage

2.1 General

ATTENTION!
A build-up of heat may damage the appliance.
- ▸ Do not place anything directly on the cooking compartment floor.
- ▸ Do not line the cooking compartment floor with aluminium foil.
- ▸ Always place cookware in a perforated cooking container or on a wire rack.

Chlorinated tap water (>40 mg/l) may damage the appliance.
- ▸ Use low-chloride non-carbonated mineral water.
- ▸ You can obtain information about your tap water from your water supplier.

Chloride and acids may damage the stainless steel surface.
- ▸ Remove any residues of salt, hot sauces, e.g. ketchup or mustard, salted food, e.g. salted roasts, or other foods containing chloride or acid immediately.

Aluminium foil can cause permanent discolouration on the door pane.
- ▸ Ensure that the aluminium foil does not come into contact with the door pane.

Fruit juice can cause permanent stains in the cooking compartment.
- ▸ Always remove fruit juice immediately.
- ▸ Wipe with a damp cloth, followed by a dry cloth.

The prolonged presence of moisture in the cooking compartment leads to corrosion.
- ▸ Do not keep moist food in the cooking compartment for a long time with the door closed.
- ▸ Do not store food in the cooking compartment.

Rusting material may lead to corrosion in the cooking compartment.
- ▸ Only use original accessories in the cooking compartment.
- ▸ Do not use any enamelled baking trays or grill trays.
- ▸ Never use serving plates or cutlery that may rust.

Small parts that are not original may damage the appliance.
- ▸ Only use original small parts, e.g. knurled nuts.
- ▸ If necessary, order small parts from our spare parts service.

Heat can damage stainless steel cooking containers.
- ▸ Only heat stainless steel cooking containers up to 230 °C.
- ▸ Do not use stainless steel cooking containers in the oven.

Leaving the appliance to cool down with the door open will damage the front of neighbouring kitchen units over time.
- ▸ Always allow the cooking compartment to cool down with the door closed after cooking at high temperatures.
- ▸ Take care not to trap anything in the appliance door.
- ▸ Only leave the cooking compartment to dry with the door open if a lot of moisture was produced during operation.

If the seal is very dirty, the appliance door will no longer close properly during operation. This may damage the front of adjacent kitchen units.
- ▸ Keep the seal clean at all times.
- ▸ Never operate the appliance if the seal is damaged or missing.

Sitting or placing objects on the appliance door may damage it.
- ▸ Do not place, hang or support objects on the appliance door.
- ▸ Do not place cookware or accessories on the appliance door.

2.2 Steam

ATTENTION!
Dripping liquids may damage the cooking compartment.
- ▸ To catch any dripping liquids, when steaming using a perforated cooking container, always insert the unperforated cooking container underneath.

Silicone bakeware is not suitable for combined operation with steam.
- ▸ Cookware must be heat- and steam-resistant.

Using cookware with rust spots may cause corrosion in the cooking compartment. Even the smallest spots of rust can cause corrosion.
- ▸ Do not use cookware with rust spots.

Hot water in the water tank may damage the steam system.
- ▸ Only fill the water tank with cold water.

If descaling solution comes into contact with the control panel or other delicate surfaces, it will damage them.
- ▸ Remove descaling solution immediately with water.

2.3 Core temperature probe

⚠ **WARNING – Risk of electric shock!**
An incorrect core temperature probe may damage the insulation.
- ▸ Only use the core temperature probe that is suitable for this appliance.

ATTENTION!
Temperatures above 250 °C damage the core temperature probe.
- ▸ Only use the core temperature probe in your appliance at a maximum temperature of 230 °C.

You may damage the cable of the core temperature probe with the appliance door.
- ▸ Do not trap the cable of the core temperature probe in the appliance door.

The heat of the grill heating element may damage the core temperature probe.
- ▸ Ensure that the distance between the grill heating element and the core temperature probe and the cable of the core temperature probe is a few centimetres. In doing so, ensure that the meat can expand during the cooking process.

Moisture may damage the core temperature probe.
- ▸ Do not clean the core temperature probe in the dishwasher.

2.4 Cleaning

ATTENTION!

Limescale may damage the appliance.

- ▸ Descale the appliance regularly.

Using the wrong descaler may damage the appliance.

- ▸ Only use the specified descaling tablets.

Improper care of the appliance can lead to corrosion in the cooking compartment.

- ▸ Follow the care and cleaning instructions for the appliance.
  → *"Cleaning and servicing", Page 27*
- ▸ Clean the cooking compartment each time you use it as soon as the appliance has cooled down.
- ▸ After cleaning the cooking compartment, use the drying programme → *Page 31* to dry it.

The descaling tablet may damage the cooking compartment.

- ▸ Use the descaling tablet for the descaling programme only.
- ▸ Place the descaling tablet into the water tank.
- ▸ Never place the descaling tablet in the cooking compartment or heat it up in the cooking compartment.

Heat may melt the cleaning cartridge and damage the cooking compartment.

- ▸ Use cleaning cartridges for the cleaning programme only.
- ▸ Never place cleaning cartridges in the cooking compartment when it is hot or heat them up in the cooking compartment.

Heat may damage the inserted cartridge.

- ▸ Never heat up the appliance if you have inserted the cartridge.

Heat damages the water tank.

- ▸ Do not dry the water tank in the hot cooking compartment.

3 Environmental protection and saving energy

3.1 Disposing of packaging

The packaging materials are environmentally compatible and can be recycled.

- ▸ Sort the individual components by type and dispose of them separately.

3.2 Saving energy

If you follow these instructions, your appliance will use less power.

When steaming, you can cook on several levels at the same time.

- ■ With steam, various dishes can be prepared at the same time without the different flavours mixing. When preparing dishes with different cooking times, those with the longest cooking time should be placed in the oven first.

When cooking multiple dishes, do so in succession or in parallel.

- ■ The cooking compartment is heated after cooking the first dish. This reduces the cooking time for the following dishes.

If the cooking time is relatively long, you can switch the appliance off 10 minutes before the cooking time ends.

- ■ There will be enough residual heat to finish cooking the dish.

Use dark-coloured, black-coated or enamelled baking tins.

- ■ These types of baking tin absorb the heat particularly well.

Open the appliance door as little as possible during operation.

- ■ This maintains the temperature in the cooking compartment and eliminates the need for the appliance to reheat.

Remove any accessories that are not being used from the cooking compartment.

- ■ Accessories that are not being used do not need to be heated.

Allow frozen food to defrost before cooking.

- ■ This saves the energy that would otherwise be required to defrost it.

4 Familiarising yourself with your appliance

4.1 Appliance

You can find an overview of the parts of your appliance here.

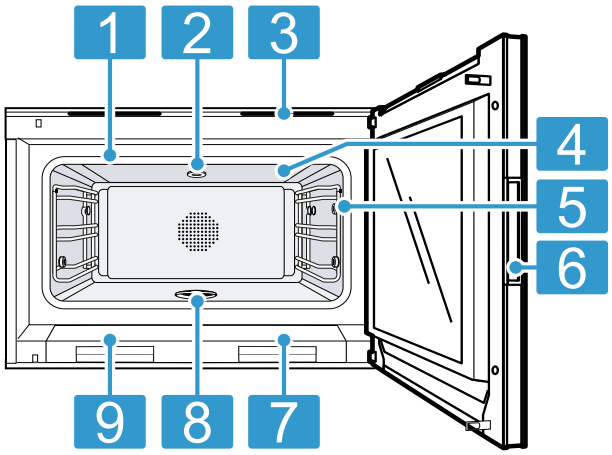

1	Door seal
2	Socket for cleaning cartridge
3	Ventilation slots
4	Glass ceramic grilling surface
5	Connection socket for core temperature probe → *Page 20*
6	Recessed door handle
7	Fresh-water tank
8	Drain filter
9	Process-water tank

Cooking compartment

The cooking compartment has three shelf levels. Count the shelf levels from the bottom up.

ATTENTION!

A build-up of heat may damage the appliance.

- Ensure that the cooking compartment floor always remains clear.
- Do not place anything directly on the cooking compartment floor.
- Do not line the cooking compartment floor with aluminium foil.
- Always place cookware in the perforated cooking container or on the wire rack.

The accessories may tip.

- Do not push the accessories between the shelf positions.

When steaming, defrosting, dough proving and reheating, you can use up to three shelf levels at a time. You can only bake on one level. Use level 2 for baking or, for taller baking tins, use level 1. For very small baked goods, you can also use two levels, e.g. level 1 and level 3.

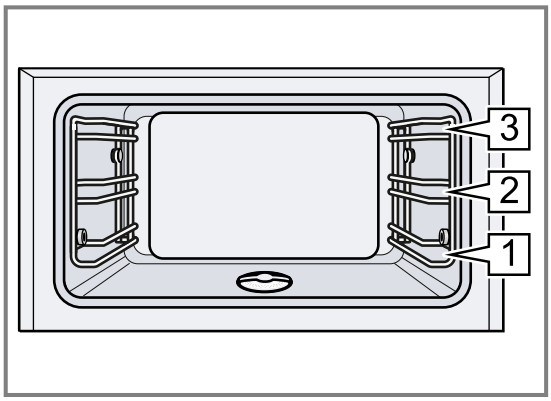

Fresh-water tank and process-water tank

Your appliance is equipped with a fresh-water tank and a process-water tank.

If you open the appliance door, you can see the process-water tank on the left and the fresh-water tank on the right. Always fill the fresh-water tank before operating the appliance with a type of heating with steam.

→ *"Fill the water tank", Page 14*

To cook without steam, leave the empty water tank in the tank slot in the appliance.

The fresh-water tank has a capacity of approx. 1.7 litres. After using the appliance with a steam function, allow it to cool down. Empty, clean and dry the fresh-water tank and process-water tank.

The appliance, tank and tank lid bear symbols for fresh water and process water. If you fit the wrong tank lid, it will not close properly. If you slide either of the tanks into the wrong opening, you will not be able to push it in all the way.

Controls

You can use the control panel to configure all functions of your appliance and to obtain information about the operating status.

On certain models, specific details such as colour and shape may differ from those pictured.

Depending on the appliance variant, the function selector and rotary selector are above or below the display.

All appliance types are operated in an identical manner.

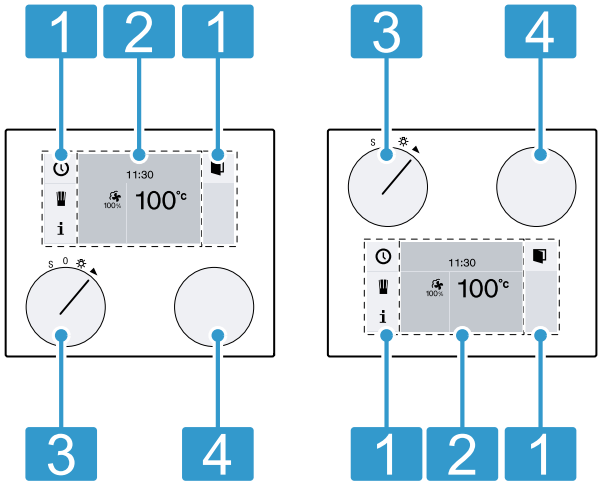

1	**Touch fields**	These areas are touch-sensitive. Touch a symbol to select the corresponding function.
2	**Display**	The display shows current settings and selection options, for example.
3	**Function selector**	Use the function selector to select the type of heating, cleaning or the basic settings.
4	**Rotary selector**	Use the rotary selector to select the temperature and change additional settings.

Symbols

Use the symbols to start or stop functions, or to navigate in the menu.

Symbol	Function
▶	Start
■	Stop
⏸	Pause or end
✕	Cancel
C	Delete
✓	Confirm or save settings
›	Selection arrow
	Open the appliance door
i	Call up additional information
i!	Call up important information and prompts indicating that an action is required

Symbol	Function
»	Rapid heating with status display
	Call up automatic programmes or individual recipes
rec ●	Record menu
	Edit settings
› A Ä	Enter a name
⌫	Delete letters
	Childproof lock
	Call up the timer menu
	Call up the long-term timer
	Demo mode
	Core temperature probe → *Page 20*
	Start steam injection
	End steam injection
	Network connection (Home Connect)

Colours

The different colours are used to guide the user in the relevant setting situations.

Orange	■ Initial settings ■ Main functions
Blue	■ Basic settings ■ Cleaning
White	Adjustable values

Appearance

Depending on the situation, the appearance of symbols, values or the entire display changes.

Zoom	The appliance zooms in on the setting that you have just changed. If you have set a time and it is about to run out, it will appear larger on the display just before it runs out, e.g. if you have set the timer.
Pared-down display	After a short while, the appliance reduces the amount of information shown on the display and only the most important information remains. This function is preset. You can change the setting in the basic settings.

Position of the function selector

Use the function selector to select the functions or types of heating.

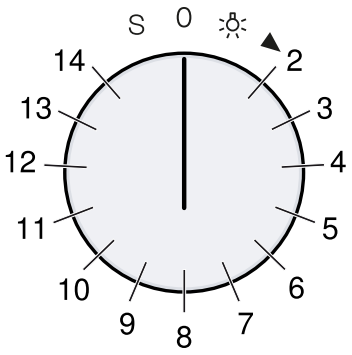

Position	Function/type of heating	Temperature	Application
0	Zero setting		
☼	Light		Switch on the interior lighting Access to other functions, e.g. automatic programmes, individual recipes, remote start via Home Connect
2	100% Hot air + 100% humidity	30-230 °C Default temperature 100 °C	Steaming at 70 °C to 100 °C: For vegetables, fish and side dishes The food is completely surrounded by steam. Combination mode at 120 °C to 230 °C: For puff pastry, bread and bread rolls The appliance combines hot air and steam.
3	80% Hot air + 80% humidity	30-230 °C Default temperature 170 °C	Combination mode: For puff pastry, meat and poultry The appliance combines hot air and steam.
4	60% Hot air + 60% humidity	30-230 °C Default temperature 170 °C	Combined operation: For yeast-risen baked goods and bread The appliance combines hot air and steam.
5	30% Hot air + 30% humidity[1]	30-230 °C Default temperature 170 °C	Cooking without added liquid: For baked items With this setting, the appliance does not generate any steam. Any moisture escaping from the food remains in the cooking compartment and prevents the food from drying out.
6	0% Hot air + 0% humidity	30-230 °C Default temperature 170 °C	Hot air: For cakes, biscuits and bakes The fan in the back panel of the oven distributes the heat evenly throughout the cooking compartment.
7	 Low-temperature cooking	30-90 °C Default temperature 70 °C	Low-temperature cooking for meat Gentle slow cooking for a particularly tender result

[1] Type of heating used to determine the energy efficiency class in accordance with EN60350-1.

Position	Function/type of heating	Temperature	Application
8	100% Sous-vide cooking	50-95 °C Default temperature 60 °C	Cooking food in a vacuum at low temperatures between 50-95 °C and with 100% steam: Suitable for meat, fish, vegetables and desserts A vacuum-sealing machine uses heat to hermetically seal the food in a special heat-resistant cooking bag. The protective envelope retains the nutrients and flavours.
9	1 Full surface grill setting 1 + humidity	30-230 °C Default temperature 170 °C	Grill mode with humidity: For bakes and gratins
10	2 Full surface grill setting 2 + humidity	30-230 °C Default temperature 170 °C	Grill mode with humidity: For stuffed vegetables The grill output is increased.
11	Full surface grill + air recirculation	30-230 °C Default temperature 230 °C	For au gratin dishes at the end of the cooking time at 230 °C. For grilling vegetable skewers and prawn skewers at 180 °C.
12	Dough proving	30-50 °C Default temperature 38 °C	Proving: For yeast dough and sour dough The dough rises considerably more quickly than at room temperature. Hot air and steam are combined so that the surface of the dough does not dry out. The optimal temperature setting for yeast dough is 38 °C.
13	Defrosting	40-60 °C Default temperature 45 °C	For vegetables, meat, fish and fruit The appliance uses the moisture to gently transfer the heat to the food. The food does not dry out or lose its shape.
14	Reheating	60-180 °C Default temperature 120 °C	For cooked food and baked goods For gently reheating cooked food. The steam ensures that the food does not dry out. Reheat plated meals at 120 °C and baked goods at 180 °C.
S	Basic settings		Adapt the appliance to individual requirements in the basic settings → *Page 24*
S	Cleaning programme		Use the cleaning programme → *Page 29* to remove stubborn dirt from the cooking compartment
S	Drying programme		Use the drying programme → *Page 31* to dry the cooking compartment quickly, e.g. after cleaning
S	Descaling programme		Use the descaling programme → *Page 31* to remove limescale from the appliance

[1] Type of heating used to determine the energy efficiency class in accordance with EN60350-1.

4.2 Automatic door-opening

Press ◨ and the appliance opens the door. Use the recessed grip on the side of the oven to open the appliance door fully.
If the childproof lock is activated, press and hold ◨ for a few seconds until the appliance opens the door.
In the event of a power failure, the automatic door-opening does not work. You can open the door by hand using the recessed grip on the side.

4.3 Standby

The appliance switches to standby mode if no function is set or the childproof lock is activated. The standby screen appears if you do not implement any settings for a long time.
Different displays can be shown in standby mode. The GAGGENAU logo and the time are preset.
In standby mode, the brightness of the control panel is reduced. The brightness of the display depends on the vertical viewing angle. You can change the display and the brightness at any time in the basic settings
→ *Page 24*.
When "Off" is selected for the standby display in the basic settings, you must turn the function selector to exit standby mode.
When the door is open, the interior lighting switches off after a short time.



4.4 Additional information

Press **i** to display additional information, e.g. information about the type of heating that is set or the current cooking compartment temperature.
During continuous operation after heating up, slight temperature fluctuations are normal.
The appliance displays the **i**ⓘ symbol for important information and indicates that an action is required. The appliance also occasionally displays important information about safety and the operating status automatically. These messages disappear automatically after a few seconds, or press ✔ to confirm the message.
For messages about Home Connect, the appliance also displays the Home Connect status in the **i**ⓘ symbol.

4.5 Cooling fan

The cooling fan switches on when the appliance is in operation. The hot air escapes above the door.
After removing your food from the appliance, keep the door closed until the appliance has cooled down. The appliance door must not be left half open as this may damage adjacent kitchen units. The cooling fan continues running for a certain period of time after the appliance has stopped heating and then it switches itself off automatically.
Do not cover the ventilation slots. Otherwise, the appliance will overheat.

4.6 Drying the cooking compartment

After operation with a steam function, the cooking compartment is damp. The cooling fan and the fan wheel on the back wall of the cooking compartment continue to run for a while after the appliance is switched off and then they switch off automatically.
The process of drying the cooking compartment may take up to 95 minutes. Keep the appliance door closed while the cooking compartment is being dried.

4.7 Safety switch-off function

For your safety, the appliance has a safety switch-off function. The appliance switches off any heating process after 12 hours if the appliance controls are not used during this time. The display shows a message.
For programming with the long-term timer, the appliance does not activate the safety switch-off function.

5 Accessories

Use original accessories. These have been made especially for your appliance.

Note: Accessories may become deformed if they get hot. Deformation has no effect on function. As the accessory cools down, it will regain its original shape.

The accessories supplied may differ depending on the appliance model.

Accessories		Use
Wire rack		■ Cookware ■ Cake tins ■ Ovenproof dishes ■ Frying
Cooking containers made of stainless steel, unperforated, 40 mm deep	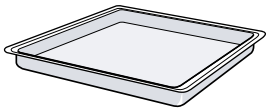	■ Cooking rice ■ Cooking pulses ■ Cooking cereals ■ Baking tray bakes ■ For catching dripping liquid during steaming
Stainless steel cooking container, perforated, 40 mm deep	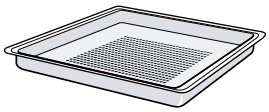	■ Steaming vegetables ■ Steaming fish ■ Extracting juice from berries ■ Defrosting
Set with 4 cleaning cartridges	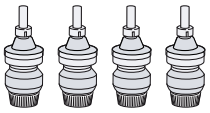	Clean the cooking compartment with the cleaning programme → *Page 29*
Core temperature probe	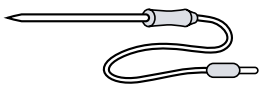	Core temperature probe → *Page 20* for the highly precise cooking of: ■ Meat ■ Fish ■ Poultry ■ Bread

5.1 Other accessories

You can purchase other accessories from our after-sales service, specialist retailers or online.
You will find a comprehensive range of products for your appliance in our brochures and online: www.gaggenau.com
Accessories vary from one appliance to another. When purchasing accessories, always quote the exact product number (E no.) of your appliance.
You can find out which accessories are available for your appliance in our online shop or from our after-sales service.

Other accessories	Order number
Three-level fully extendable telescopic pull-out rack	BA010301
Stainless steel cooking container, unperforated, 40 mm deep, 5 l	BA020360
Stainless steel cooking container, perforated, 40 mm deep, 5 l	BA020370
Cooking container, non-stick, unperforated, 40 mm deep, 5 l	BA020380
Cooking container, non-stick, perforated, 40 mm deep, 5 l	BA020390
Wire rack, with feet	BA030300
Set with 4 cleaning cartridges	CLS10040
Set with 4 descaling tablets	17002490

Other accessories	Order number
GN adapter, for use with GN cooking inserts and roasters	GN010330
Stainless steel cooking container, GN 1/3, unperforated, 40 mm deep, 1.5 l	GN114130
Stainless steel cooking container, GN 2/3, unperforated, 40 mm deep, 3 l	GN114230
Stainless steel cooking container, GN 1/3, perforated, 40 mm deep, 1.5 l	GN124130
Stainless steel cooking container, GN 2/3, perforated, 40 mm deep, 3 l	GN124230
Cast aluminium roaster	GN340230

5.2 Locking function

The locking function prevents the accessories from tilting when they are pulled out.
You can pull out the accessories approximately halfway without them tipping. The accessories must be inserted into the cooking compartment correctly for the tilt protection to work correctly.

5.3 Sliding accessories into the cooking compartment

The wire rack and the perforated cooking container are fitted with a locking function. For the tilt protection to work correctly, always insert the wire rack and the perforated cooking container into the cooking compartment the right way round.

ATTENTION!

The accessories may tip.

- Do not push the accessories between the shelf positions.

1. When inserting the wire rack, ensure that the lug [a] is facing upwards.

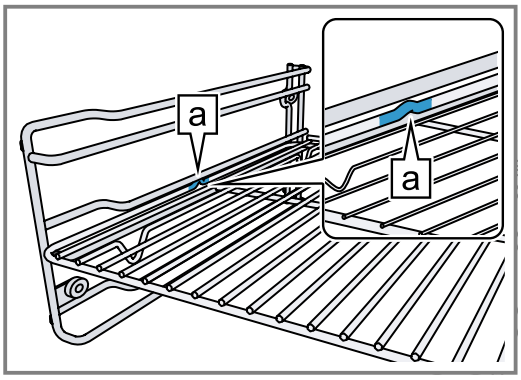

2. Ensure that the safety bracket on the wire rack is located at the rear and is facing upwards.
3. When inserting the cooking container, ensure that the lug [a] is facing upwards.

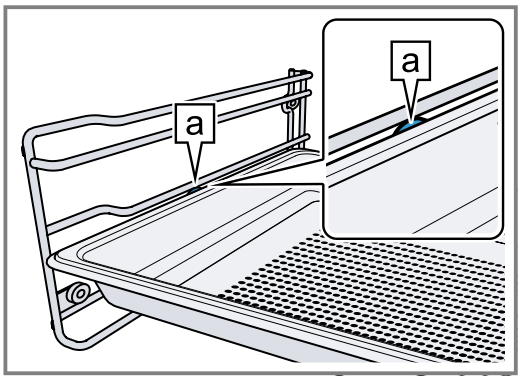

Note: To completely pull out the accessories, lift them slightly.

Remove any accessories that you do not require from the cooking compartment.

6 Before using for the first time

Clean the appliance and accessories.

6.1 Initial use

Implement the settings for initial use before using your appliance.

First read the information under safety → *Page 2*.

The appliance must be installed and connected.

After connecting the appliance to the power supply, the GAGGENAU logo appears for approx. 30 seconds and then the appliance displays the "Initial settings" menu.

You can configure your new appliance for initial use.

The "Initial settings" menu appears only after the appliance has been connected to a power supply and switched on for the first time, or if the appliance has not been connected to a power supply for a number of days.

You can change all of the settings in the basic settings → *Page 24*.

Setting the language

Requirement: The display shows the preset language.

1. Use the rotary selector to select the required display language.
2. Press ✔ to confirm.

Setting the time format

Requirement: The display shows the possible formats 24h and AM/PM. 24h is preset.

1. Use the rotary selector to set the required format.
2. Press ✔ to confirm.

Set the time

Requirement: The display shows the time.

1. Use the rotary selector to set the required time.
2. Press ✔ to confirm.

Setting the date format

Requirement: The display shows the possible formats D.M.Y, D/M/Y and M/D/Y. D.M.Y is preset.

1. Use the rotary selector to set the required format.
2. Press ✔ to confirm.

Setting the date

Requirement: The display shows the preset date. The daily setting is already active.

1. Use the rotary selector to set the required day.
2. Press › to switch to the month setting.
3. Use the rotary selector to set the month.
4. Press › to switch to the year setting.
5. Turn the rotary selector to set the year.
6. Press ✔ to confirm.

Setting the temperature unit

Requirement: The display shows the possible units °C and °F. The unit °C is preset.

1. Turn the rotary selector to set the required unit.
2. Press ✔ to confirm.

Ending the initial use

Requirement: The display shows "Initial set-up complete".

- Press ✔.
- ✔ The appliance switches to standby mode.
- ✔ The display shows the standby screen.
- ✔ The appliance is ready to use.

Cleaning the door pane

Note: To ensure tightness, the door seal is lubricated at the factory. Residue may remain on the door pane.

- Before using for the first time, clean the door pane with glass cleaner and a window cloth or a microfibre cloth.
  Do not use a glass scraper.

Cleaning accessories

- Before first use, clean the accessories thoroughly using hot soapy water and a soft cloth.

Heating up the appliance

1. Ensure that there is no leftover packaging in the cooking compartment.
2. Remove any accessories from the cooking compartment.
3. To eliminate the new-appliance smell, heat up the empty appliance with the door closed.
   The ideal setting for heating is 60% and 200 °C for one hour.

7 Basic operation

7.1 Activating the appliance

1. To exit standby mode, open the door and turn the function selector or touch a touch field.
2. Set the required function.

7.2 Opening the appliance door

1. Press .
✔ The appliance opens the appliance door.
2. Use the recessed grip on the side of the oven to open the appliance door fully.
   If the childproof lock is activated, press and hold for a few seconds until the appliance opens the door.

7.3 Fill the water tank

⚠ WARNING – Risk of fire!

Due to the hot surfaces, vapours from flammable liquids may catch fire in the cooking compartment and cause an explosion. The appliance door may spring open. Hot steam and jets of flame may escape.

- Only fill the water tank with water or with the descaling solution that is recommended by us.

⚠ WARNING – Risk of burns!

The front edge of the cooking compartment becomes very hot during operation.

- When removing the water tank, only touch its handle.

ATTENTION!

The use of unsuitable liquids may damage the appliance.

- Only use fresh tap water, softened water or uncarbonated mineral water.
- If the tap water is very hard, we recommend using softened water.
- Do not use distilled water, highly chlorinated tap water (above 40 mg/l) or other liquids.

Note: Fill the fresh-water tank → *Page 7* before operating the appliance with steam.
To cook without steam, leave the empty water tank in the tank slot in the appliance.
The fresh-water tank is on the right-hand side of the appliance. The fresh-water tank has a capacity of approx. 1.7 litres.

1. Open the appliance door.
2. Pull the fresh-water tank out of the appliance until the fill level indicator is visible, or completely remove the fresh-water tank from the appliance.

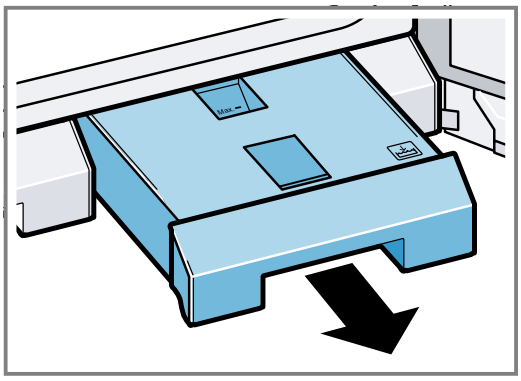

3. Open the valve on the fresh-water tank.
4. Fill the fresh-water tank with cold water up to the "Max." mark.

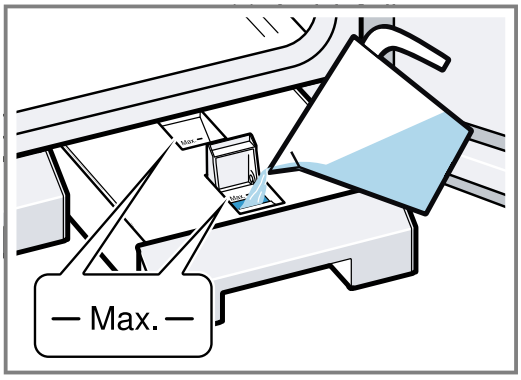

5. Close the valve on the fresh-water tank.
6. Slide the fresh-water tank back in as far as it will go.
7. When fitting the tank lid and sliding the tank in, observe the symbols for fresh water and process water → *Page 7*.

7.4 Switching on the appliance

1. Use the function selector to set the required type of heating.
✔ The display shows the selected type of heating and the suggested temperature.
2. If required, use the rotary selector to set the desired temperature.
✔ The display shows the heating symbol .
✔ The bar displays the current heating status.

✔ Once the appliance reaches the set temperature, a signal tone sounds and the heating symbol goes out ».

Notes

- If you select a different type of heating, the temperature that has been set is retained.
  The display only shows the suggested temperature once the appliance has been switched on.
- If the water tank is empty, the display shows a message.
  → *"Fill the water tank", Page 14*

7.5 Switching off the appliance

▸ Turn the function selector to 0.
Depending on the type of heating, you may hear an automatic rinse cycle running.

7.6 Steam injection

During steam injection, the appliance injects steam into the cooking compartment. This enables you to bake food such as bread and bread rolls with sufficient moisture. It also gives yeast-risen baked goods a smooth, shiny crust.
Steam injection only works with the following types of heating:

- Hot air + 30% humidity
- Hot air + 0% humidity
- Full surface grill + air recirculation

Starting steam injection

1. Before heating, ensure that there is water in the fresh-water tank.
   If the fresh-water tank is empty, is not shown in the display.
2. Press .

✔ After a short time, the appliance injects steam into the cooking compartment.
✔ Steam is injected for approx. 5 minutes.

Cancelling steam injection

▸ Press .

7.7 After each use

After a type of heating with steam, empty, clean and dry the fresh-water tank and process-water tank. Dry the cooking compartment to ensure that no moisture remains in the appliance and to prevent odour from building up.

⚠ WARNING – Risk of scalding!
Hot steam may escape when you open the appliance door. Steam may not be visible, depending on the temperature.

▸ Open the appliance door carefully.
▸ Keep children at a safe distance.

Emptying the water tank

ATTENTION!
Heat damages the water tank.

▸ Do not dry the water tank in the hot cooking compartment.

1. Open the appliance door carefully.
   Hot steam escapes.
2. Remove, empty, clean and dry both water tanks.

Drying the cooking compartment

1. Remove food residues and/or dirt from the cooking compartment as soon as the appliance has cooled down.
   Burnt-on food residue and/or dirt will be much harder to remove later.
2. Once the cooking compartment has cooled down, wipe it out and dry it thoroughly with a soft cloth.
3. If necessary, wipe dry any condensation on units or handles.
4. If required, you can use the drying programme to dry the cooking compartment quickly. Drying programme → *Page 31*

7.8 Switching on the appliance after a safety switch-off

Requirement: After prolonged operation, the safety switch-off function → *Page 11* switches off the appliance.

1. Turn the function selector to 0.
2. Switch the appliance back on again.

8 Timer functions

Your appliance has different timer functions, with which you can control its operation.

8.1 Overview of the timer functions

Use to select the different timer functions.

Timer function	Use
	Short-term timer
	Cooking time[1]
	Cooking time end[1]
	Stopwatch

[1] Not available in standby mode

8.2 Calling up the timer menu

Note: You can call up the timer menu from any operating mode. The timer menu is not available if you turn the function selector to S in the basic settings.

▸ Press .
✔ The display shows the timer menu.

8.3 Exiting the timer menu

▸ Press X.
✔ The timer menu is closed.
✔ Any settings that are not saved are lost.

Note: You can exit the timer menu at any time.

8.4 Short-term timer

The short-term timer runs independently of the other appliance settings. You can enter a maximum of 90 minutes.

Setting the short-term timer

1. Press ⏲.
✔ The display shows the "Short-term timer" ⧖ function.
2. Use the rotary selector to set the required cooking time.
3. Press ▶ to start.
✔ The appliance closes the timer menu.
✔ The time counts down.
✔ The display shows ⧖ and the time that has elapsed.
✔ A signal tone sounds once the time has elapsed.
4. Press ✔.
✔ The signal tone stops.

Stopping the short-term timer

1. Press ⏲.
✔ The display shows the "Short-term timer" ⧖ function.
2. Press ⏸.
✔ The short-term timer stops.
✔ The display shows ▶.
3. To allow the timer to continue counting down, touch ▶.

Switching off the timer early

1. Press ⏲.
✔ The display shows the "Short-term timer" function.
2. Press C.

8.5 Stopwatch

The stopwatch runs independently of the other appliance settings. The stopwatch counts from 0 seconds up to 90 minutes.
The stopwatch has a pause function. This allows you to stop the stopwatch from time to time.

Starting the stopwatch

1. Press ⏲.
2. Use ❯ to select the "Stopwatch" ⏱" function.
3. Press ▶ to start.
✔ The appliance closes the timer menu.
✔ The time counts down.
✔ The display shows ⏱ and the time that has elapsed.

Stopping the stopwatch

1. Press ⏲.
2. Use ❯ to select the "Stopwatch" ⏱" function.
3. Press ⏸.
✔ The time stops.
✔ The display shows ▶.
4. To continue to run the stopwatch, press ▶.
✔ The time continues to run.
✔ Once it has reached 90 minutes, the display flashes and a signal tone sounds.
5. Press ✔.
✔ The signal tone stops.

Switching off the stopwatch

1. Press ⏲.
2. Use ❯ to select the "Stopwatch" ⏱" function.
3. Press C.

8.6 Cooking time

When you set the cooking time for your food, the appliance automatically switches off after this time. You can set a cooking time of between 1 minute and 23:59 hours.
You can change the type of heating and temperature while the cooking time counts down.

Setting the cooking time

Requirement: The food is in the cooking compartment. You have set the type of heating and the temperature.

1. Press ⏲.
2. Use ❯ to select the "Cooking time" ◔ function.
3. Use the rotary selector to set the required cooking time.
4. Press ▶ to start.
✔ The appliance starts the cooking time.
✔ The appliance closes the timer menu.
✔ The display shows the temperature, the operating mode, the remaining cooking time and the cooking time end.
✔ One minute before the end of the cooking time, the display zooms in on the cooking time.
✔ Once the cooking time has elapsed, the appliance switches off.
✔ ◔ flashes and a signal tone sounds.
5. Press ✔, open the appliance door or set the function selector to 0.
✔ The signal tone stops.

Changing the cooking time

1. Press ⏲.
2. Use ❯ to select the "Cooking time" ◔ function.
3. Use the rotary selector to change the cooking time.
4. Press ▶ to start.

Deleting the cooking time

1. Press ⏲.
2. Use ❯ to select the "Cooking time" ◔ function.
3. Use C to cancel the cooking time.
4. Use ✖ to return to normal operation.

Cancelling the entire procedure

▸ Turn the function selector to 0.

8.7 Cooking time end

You can move the cooking time end to a later time. Example: It is 14:00. The dish requires a cooking time of 40 minutes. You want the meal to be ready at 15:30. Enter the cooking time of 40 minutes and delay the cooking-time end until 15:30. The electronics system calculates the start time. The appliance starts automatically at 14:50 and switches off at 15:30.
Bear in mind that food which spoils easily should not be left in the appliance for too long.

Delaying the cooking time end

Requirement: The food is in the cooking compartment. You have set the type of heating, temperature and cooking time.

1. Press ⏲.
2. Use ❯ to select the "Cooking time end" ◔ function.

3. Use the rotary selector to set the required cooking-time end.
   If ◔ flashes, set the cooking time first.
4. Press ▶ to start.

✔ The appliance switches to standby.
✔ The display shows the operating mode, temperature, cooking time and cooking time end.
✔ The appliance starts at the calculated time and automatically switches off once the cooking time has elapsed.
✔ After the cooking time has elapsed, ◷ flashes and a signal tone sounds.

5. Press ✔, open the appliance door or set the function selector to 0.

✔ The signal tone stops.

Changing the cooking time end

1. Press ◷.
2. Use › to select the "Cooking time end" ◷ function.
3. Use the rotary selector to set the required cooking-time end.
4. Press ▶ to start.

Cancelling the entire procedure

▸ Turn the function selector to 0.

9 Long-term timer

With this function, the appliance uses the Hot air + 0% humidity type of heating to keep the temperature between 50 °C and 230 °C.
You can keep food warm for up to 74 hours without having to switch the appliance on or off.
Bear in mind that food which spoils easily should not be left in the appliance for too long.

9.1 Starting the long-term timer

Requirement: The long-term timer is set to "Available" in the basic settings → *Page 24*.

1. Turn the function selector to ☼.
2. Press ◷.

✔ The display shows the default value 24h at 85 °C.

3. Press ◷ and use the rotary selector to set the required cooking time.
4. Press › and use the rotary selector to set the required cooking time end.
5. Press ›, use the rotary selector to set the required switch-off date, and press ✔ to confirm.
6. Use the rotary selector to set the desired temperature.
7. Press ▶ to start.

✔ The appliance starts the long-term timer.
✔ The display shows ◷ and the temperature.
✔ The interior lighting and the display light are switched off.
✔ The control panel is locked.
✔ If you touch the control panel, no signal tone sounds.
✔ Once the time has elapsed, the appliance no longer heats up and the display goes out.

8. Turn the function selector to 0.

9.2 Switching off the long-term timer

▸ Turn the function selector to 0.

10 Childproof lock

Activate the childproof lock so that children cannot accidentally switch the appliance on or change the settings.
If the childproof lock is switched on and the power fails, the childproof lock can be deactivated when the power comes back on.

10.1 Activating the childproof lock

Requirements

- You can set the childproof lock to "available" in the basic settings → *Page 24*.
- The function selector is set to 0.

▸ Press and hold 🔒 for approx. 6 seconds.

✔ The display shows the standby screen and 🔒.
✔ The childproof lock is activated.

10.2 Deactivating the childproof lock

Requirement: The function selector is set to 0.

1. Press and hold 🔓 for approx. 6 seconds.

✔ The childproof lock is deactivated.

2. Set the appliance as normal.

11 Automatic programmes

You can prepare a wide range of food using the automatic programmes. The appliance selects the optimal setting for you.

11.1 Information about the settings for the automatic programmes

Observe the instructions for the settings of the automatic programmes.

- The cooking result depends on the quality of the food and the size and type of cookware. For an optimal cooking result, only use food that is in good condition and meat that is chilled to refrigerator temperature. For frozen food, only use food straight out of the freezer.
- The food is divided into categories. One or more dishes are listed for each category. The first position on the display shows the last selected category.
- The automatic programme suggests a temperature, type of heating and cooking time.
- For some food, the appliance prompts you to enter the weight. It is not possible to set weights outside the preprogrammed weight range.
- For some dishes, you are asked to enter the desired level of browning, the thickness of the food and the cooking level of the meat or vegetables.
- For some food, preheat the empty cooking compartment. Only place the food in the cooking compartment once the preheating is complete and a message is shown on the display.
- Your preferred settings are shown next time as a suggestion.
- For some recipes, you need the core temperature probe. Use the core temperature probe for these recipes. → *Page 20*
- To achieve good results, the cooking compartment must not be too hot for the type of food you have selected. If the cooking compartment is too hot, the display shows a corresponding notification. Allow the appliance to cool and then try again.

11.2 Setting the food

Note: The appliance guides you through the entire setting process.

1. Follow the instructions on the display.
2. Use the rotary selector to scroll through the individual levels.
3. Turn the function selector to ☼.
4. Press 🍳.
5. Press ✔ to confirm.
6. Use the rotary selector to select the required category.
7. Use the rotary selector to select the food that you require.
8. For many dishes, you can change the settings to suit your needs.
   For some dishes, you must set the weight.
   ✔ The display shows the possible settings.
9. Press 🗨.
   ✔ The display shows information about the accessories and preparation.
10. Press ✔ to confirm the required settings.
11. Follow the information on the display.
    ✔ Once the cooking time has elapsed, a signal tone sounds.
    ✔ The appliance stops heating.

Note: If you open the appliance door during an automatic programme, this affects the cooking result. Open the appliance door only briefly. The appliance interrupts the automatic programme and continues to run when you close the appliance door.

Adding extra cooking time

After the cooking time has ended, you can leave some dishes to continue cooking if you are not satisfied with the cooking result.

Requirement: A query appears on the display asking if you want to continue cooking.

1. Press ✔ to confirm.
2. Select a single or double cooking time as required.
3. Press ▶ to start.
4. If the "Continue cooking" function has ended, turn the function selector to 0.

Changing and cancelling the programme

Note: Once you have started the programme, you can no longer change the settings.

▸ Turn the function selector to 0.
✔ The appliance ends the programme.

11.3 Calling up the last automatic programmes used

The appliance saves the last 5 dishes with the settings that you selected. You have the option to save these dishes with the selected settings as individual recipes.

Note: If you save the settings for the individual recipe using the "Last automatic programmes" function, you can no longer retroactively change the settings for individual recipes.
→ *"Individual recipes", Page 19*

1. Turn the function selector to ☼.
   ✔ The display shows 🍳.
2. Press 🍳.
3. Use the rotary selector to select "Last automatic programmes".
4. Press ✔ to confirm.
5. Use the rotary selector to select the food that you require.
6. Enter and save a name for the dish. → *Page 19*

12 Individual recipes

You have the option to save up to 50 individual recipes with a name so that, if required, you can access the recipe quickly and easily. You can record a recipe.

12.1 Recording a recipe

It is possible to set and record up to 5 phases consecutively.

1. Turn the function selector to ☼.
2. Press ▮.
3. Use the rotary selector to select "Individual recipes".
4. Press ✔ to confirm.
5. Use the rotary selector to select a free memory location.
6. Press rec ●.
7. Use the rotary selector to set the desired temperature.

✔ The appliance records the cooking time.

8. To record another phase, set the function selector to the required type of heating and use the rotary selector to set the required temperature.

✔ A new phase starts.

9. When the dish has reached the required cooking result, press ■.
10. Enter the name under "ABC".
    → *"Entering a name", Page 19*
    The appliance only starts recording a phase once it has reached the set temperature.
    Each phase must last at least one minute.
    During the first minute of a phase, you can change the type of heating or the temperature.

Entering the core temperature for a phase

1. Insert the core temperature probe → *Page 20* into the socket in the cooking compartment.
2. Set the type of heating and the temperature.
3. Press ⟋.
4. Use the rotary selector to set the desired core temperature and press ⟋ to confirm.

12.2 Programming a recipe

1. Turn the function selector to ☼.
2. Press ▮.
3. Use the rotary selector to select "Individual recipes" and press ✔ to confirm.
4. Use the rotary selector to select a free memory location.
5. Press ⟍_.
6. Enter the name under "ABC".
   → *"Entering a name", Page 19*
7. Use › to select the first phase.

✔ The display shows the type of heating and temperature that are selected at the start.

8. If required, use the rotary selector to change the type of heating and the temperature.
9. Use › to select the time setting.
10. Use the rotary selector to set the required cooking time.
11. If the preparation is complete, use ✘ to finish making entries or use › to select the next phase.
12. Use ✔ to save or ✘ to cancel, and exit the menu.

Entering the core temperature for a phase

Note: You cannot enter the cooking time for phases with a programmed core temperature.

1. Press › to select the next phase.
2. Set the type of heating and the temperature.
3. Press ⟋.
4. Use the rotary selector to set the desired core temperature and press ⟋ to confirm.

12.3 Entering a name

1. Enter a name for the recipe under "ABC".
2. Use the rotary selector to select the letters.
   A new word always begins with a capital letter.
   Latin characters, certain special characters and numbers are available.
3. Briefly press ›A Ä to position the cursor to the right.
4. Press and hold ›A Ä to switch to umlauts and special characters.
5. Press ›A Ä twice to insert a break.
6. Briefly press ›Ä to position the cursor to the right.
7. Press and hold ›Ä to switch to normal characters.
8. Press ›Ä twice to insert a break.
9. Press ⌫ to delete a letter.
10. Use ✔ to save or ✘ to cancel, and exit the menu.

12.4 Starting a recipe

1. Turn the function selector to ☼.
2. Press ▮.
3. Use the rotary selector to select "Individual recipes" and press ✔ to confirm.
4. Use the rotary selector to select the desired recipe.
5. If the recipe contains a saved core temperature, insert the core temperature probe → *Page 20*.
6. Press ▶ to start.
   The cooking time does not start counting down until the appliance has reached the set temperature.
   You can use the rotary selector to change the temperature while the recipe is in progress. Changing the temperature does not change the saved recipe.

✔ The operation begins.

✔ You can see the cooking time counting down.

✔ The display shows the settings for the phases on the display bar.

12.5 Changing a recipe

You can change the settings for a recorded or programmed recipe.

1. Turn the function selector to ☼.
2. Press ▮.
3. Use the rotary selector to select "Individual recipes" and press ✔ to confirm.
4. Use the rotary selector to select the desired recipe.
5. Press ⟍_.
6. Use › to select the required phase.

✔ The display shows the programmed type of heating, temperature and cooking time.

7. If required, you can use the rotary selector or function selector to change the settings.
8. Use ✔ to save or ✘ to cancel, and exit the menu.

12.6 Deleting a recipe

1. Turn the function selector to ☼.
2. Press ▙.
3. Use the rotary selector to select "Individual recipes" and press ✔ to confirm.
4. Use the rotary selector to select the desired recipe.
5. Use C to delete the recipe.
6. Press ✔ to confirm.

13 Core temperature probe

The core temperature probe makes accurate cooking possible. The core temperature probe measures the temperature at 3 measuring points inside the food. When the required core temperature is reached, the appliance automatically switches off, ensuring that all food is cooked perfectly.

⚠ WARNING – Risk of burns!
The cooking compartment and the core temperature probe become very hot.
- Use oven gloves when inserting and removing the core temperature probe.

ATTENTION!
Temperatures above 250 °C damage the core temperature probe.
- Only use the core temperature probe in your appliance at a maximum temperature of 230 °C.

⚠ WARNING – Risk of electric shock!
An incorrect core temperature probe may damage the insulation.
- Only use the core temperature probe that is suitable for this appliance.

ATTENTION!
Moisture may damage the core temperature probe.
- Do not clean the core temperature probe in the dishwasher.

Only use the core temperature probe supplied. The core temperature probe is available as a spare part from the customer service or the online shop.
If you use the core temperature probe, never place the food on the top shelf level.
After use, always remove the core temperature probe from the cooking compartment. Never store the core temperature probe in the cooking compartment.
After each use, clean the core temperature probe with a damp cloth.

13.1 Estimated cooking time

After preheating, if the appliance has a temperature setting above 100 °C and the core temperature probe is inserted, the display shows an estimated cooking time approx. 5 to 20 minutes into the cooking time. The appliance continuously updates the estimated cooking time.
The longer the cooking process lasts, the more precise the estimated cooking time becomes. Do not open the appliance door; this distorts the estimated cooking time.
The display shows the estimated cooking time in normal operation and in the automatic programme.
Press i to display the current core temperature.
To display the current core temperature instead of the estimated cooking time, change the settings in the basic settings → *Page 24*.
The display shows "<15 °C" for the current core temperature at the beginning of the cooking time for approx. 3 to 4 minutes.
The measurable range is 15 °C to 99 °C. Outside of the measurable range, the display shows "<15 °C" or "- -°C" for the current core temperature.
If you leave food in the cooking compartment for some time after cooking, the core temperature will continue to rise somewhat due to the residual heat in the cooking compartment.
If you set programmes with the core temperature probe and the cooking timer at the same time, the appliance switches off whichever programme reaches the entered value first.

13.2 Core temperature guideline values

The following overview provides you with guideline values for the core temperature. The guideline values depend on the quality and composition of the food.
Only use fresh food that has not been frozen. For hygiene reasons, ensure that critical foods such as fish and game reach a core temperature of at least 62 °C to 70 °C and poultry and minced meat 80 °C to 85 °C.

Food	Core temperature guideline value in °C
Beef	
Sirloin, fillet of beef, entrecôte, very rare	45-47
Sirloin, fillet of beef, entrecôte, rare	50-52
Sirloin, fillet of beef, entrecôte, medium rare	58-60
Sirloin, fillet of beef, entrecôte, well done	70-75
Roast beef	80-85
Pork	
Joint of pork	72-80
Loin of pork, medium rare	65-70
Loin of pork, well done	75
Meatloaf	85
Fillet of pork	65-70
Veal	
Joint of veal, well done	75-80
Breast of veal, stuffed	75-80
Saddle of veal, medium rare	58-60

Food	Core temperature guideline value in °C
Saddle of veal, well done	65-70
Fillet of veal, rare	50-52
Fillet of veal, medium rare	58-60
Fillet of veal, well done	70-75
Game	
Saddle of venison	60-70
Leg of roe venison	70-75
Venison loin steaks	65-70
Saddle of hare, saddle of rabbit	65-70
Poultry	
Chicken	90
Guinea fowl	80-85
Goose, turkey, duck	85-90
Duck breast, medium rare	55-60
Duck breast, well done	70-80
Ostrich steak	60-65
Lamb	
Leg of lamb, medium rare	60-65
Leg of lamb, well done	70-80
Saddle of lamb, medium rare	55-60
Saddle of lamb, well done	65-75
Mutton	
Leg of mutton, medium rare	70-75
Leg of mutton, well done	80-85
Saddle of mutton, medium rare	70-75
Saddle of mutton, well done	80
Fish	
Fillet	62-65
Whole	65
Terrine	62-65
Other	
Bread	96
Pâté	72-75
Terrine	60-70
Foie gras	45
Reheating food	75

13.3 Inserting the core temperature probe into the food

1. Insert the core temperature probe fully into the food.
2. Do not insert the core temperature probe into the fat.
3. Ensure that the core temperature probe is not touching any cookware or any bones.
4. Place the food in the cooking compartment.

Inserting the core temperature probe into meat

1. Insert the core temperature probe at the thickest point on the side as far as it will go into the meat.

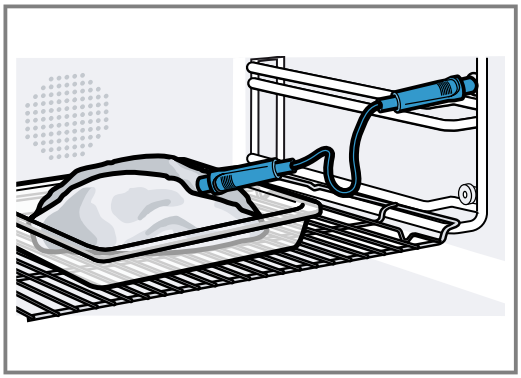

2. If there is more than one piece of meat, insert the core temperature probe into the middle of the thickest piece.

Inserting the core temperature probe into poultry

1. Insert the core temperature probe as far as it will go into the thickest point in the breast.

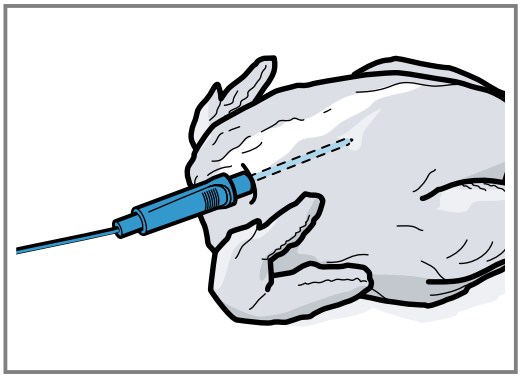

2. Depending on its composition, insert the core temperature probe into the poultry crossways or lengthways.

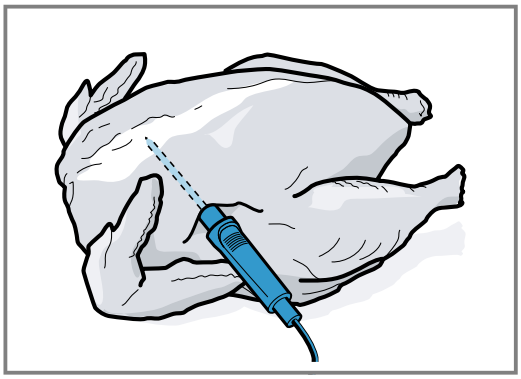

3. With poultry, ensure that the tip of the core temperature probe does not protrude into the cavity in the middle of the bird.

Inserting the core temperature probe into fish

1. Insert the core temperature probe behind the head as far as it will go towards the spine.

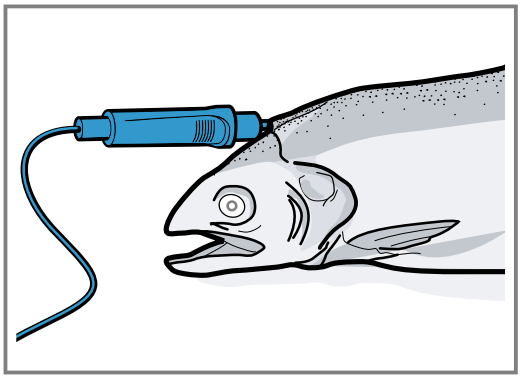

2. Place the whole fish onto the wire rack and prop it up in the swimming position using half a potato.

13.4 Turning the food

1. Do not pull out the core temperature probe when turning the food.
   If you pull out the core temperature probe during operation, the appliance resets all settings. You must reset the settings.
2. Turn the food.
3. Once you have turned the food, check that the core temperature probe is correctly positioned in the food.

13.5 Setting the core temperature probe

ATTENTION!
The heat of the grill heating element may damage the core temperature probe.

- Ensure that the distance between the grill heating element and the core temperature probe and the cable of the core temperature probe is a few centimetres. In doing so, ensure that the meat can expand during the cooking process.

You may damage the cable of the core temperature probe with the appliance door.

- Do not trap the cable of the core temperature probe in the appliance door.

1. Slide the food into the cooking compartment with the core temperature probe inserted.
2. Insert the core temperature probe into the socket in the cooking compartment.
3. Close the appliance door.
4. Turn the function selector to the required type of heating.
5. Use the rotary selector to set the cooking compartment temperature.
6. Press .
7. Use the rotary selector to set the desired core temperature and press to confirm.
   – Ensure that the set core temperature is higher than the current core temperature.
   You can change the set core temperature at any time.
   ✔ The appliance heats up using the set type of heating.
   ✔ The display shows the current core temperature and, beneath it, the set core temperature.
   ✔ Once the food reaches the core temperature that has been set, a signal tone sounds.
   ✔ The appliance ends the cooking process automatically.
8. Press ✔ to confirm.
9. Turn the function selector to 0.

Changing the set core temperature

1. Press .
2. Use the rotary selector to change the set core temperature for the food and press to confirm.

Deleting the set core temperature

1. Press .
2. Use C to delete the set core temperature.
   ✔ The appliance continues heating in normal cooking operation.

14 Home Connect

This appliance is network-capable. Connecting your appliance to a mobile device lets you control its functions via the Home Connect app, adjust its basic settings and monitor its operating status.
The Home Connect services are not available in every country. The availability of the Home Connect function depends on the availability of Home Connect services in your country. You can find information about this at: www.home-connect.com.
The Home Connect app guides you through the entire login process. Follow the instructions in the Home Connect app to configure the settings.

Tips

- Please consult the documents supplied by Home Connect.
- Please also follow the instructions in the Home Connect app.

Notes

- Please note the safety precautions in this instruction manual and make sure that they are also observed when operating the appliance via the Home Connect app.
  → *"Safety", Page 2*
- If you want to operate the appliance via the Home Connect app, you must activate the remote control function in the Home Connect settings first. This function is for your own safety. Turn the function selector on the appliance to the light position to enable the remote control function.
- Operating the appliance on the appliance itself always takes priority. During this time it is not possible to operate the appliance using the Home Connect app.
- In networked standby mode, the appliance requires a maximum of 2 W.

14.1 Setting up Home Connect

Requirements

- The appliance is connected to the power supply and is switched on.
- You have a mobile device with a current version of the iOS or Android operating system, e.g. a smartphone.
- The mobile device and the appliance are within range of your home network's Wi-Fi signal.

1. Download the Home Connect app.

GET IT ON Google Play

Download on the App Store

2. Open the Home Connect app and scan the following QR code.
3. Follow the instructions in the Home Connect app.

14.2 Home Connect settings

You can adjust the Home Connect settings and network settings in your appliance's basic settings.
Which settings the display shows will depend on whether Home Connect has been set up and whether the appliance is connected to your home network.

Symbol	Basic setting	Possible settings	Explanation
LAN / WLAN	Connection type	LAN Wi-Fi	You can switch between connection types (LAN cable and Wi-Fi). Follow the instructions for setting up the relevant connection type.
	Connection	Connect Disconnect	You can switch the network connection on or off as required. The network information is retained after the appliance is switched off. After switching on the appliance, wait for a few seconds until it reconnects to the network. **Note:** In networked standby mode, the appliance requires a maximum of 2 W.
	Connect to app		Start the connection process between the app and the appliance.
	Software update		As soon as a new software version is available, a message appears on the display. In the Home Connect menu, you can install the new software using ⇩.
	Remote control	Activate Deactivate	You can use the Home Connect app to access the appliance's functions. If the remote control has been deactivated, only the appliance's operating statuses are displayed in the app. The remote control is only available if you set the rotary selector to light position ☼. The light goes out after a few minutes.
	Permanent remote start	Activate Deactivate	When permanent remote start is activated, you can start and operate your appliance at any time without prior approval on the appliance. Permanent remote start is only available if you set the rotary selector to light position ☼. The light goes out after a few minutes.
⊗	Delete network settings		You can delete all network settings from the appliance at any time.
	Appliance information		The display shows: ■ MAC address COM module ■ Appliance serial number ■ Software version Depending on the connection type, you can view more information, such as the SSID network name, by touching the arrow button.

14.3 Data protection

Please see the information on data protection.
The first time your appliance is registered on a home network connected to the Internet, your appliance will transmit the following types of data to the Home Connect server (initial registration):

- Unique appliance identification (consisting of appliance codes as well as the MAC address of the Wi-Fi communication module installed).
- Security certificate of the Wi-Fi communication module (to ensure a secure data connection).
- The current software and hardware version of your appliance.
- Status of any previous reset to factory settings.

This initial registration prepares the Home Connect functions for use and is only required when you want to use the Home Connect functions for the first time.

Note: Please note that the Home Connect functions can only be utilised with the Home Connect app. Information on data protection can be retrieved in the Home Connect app.

15 Basic settings

You can configure the basic settings for your appliance to meet your needs.

15.1 Overview of the basic settings

Here you can find an overview of the basic settings and factory settings. The basic settings depend on the features of your appliance.

Display	Basic setting	Selection	Description
	Brightness	Levels 1, 2, 3, 4, 5[1], 6, 7, 8	Set the display brightness
	Standby screen	On[1] Off ■ Clock ■ Clock + GAGGENAU logo[1] ■ Date ■ Date + GAGGENAU logo ■ Clock + date ■ Clock + date + GAGGENAUlogo	Appearance of the standby screen Off: No display. You can use this setting to reduce the standby energy consumption of your appliance. On: Multiple screens can be adjusted. Press ✓ to confirm "On" and use the rotary selector to select the required screen.
	Display screen	Reduced[1] Standard	"Reduced": After a short time, the display shows only the most important information.
	Touch field colour	Grey[1] White	Select the colour of the symbols on the touch fields
	Touch field tone type	Tone 1[1] Tone 2 Off	Press a touch field to select a signal tone
	Touch field tone volume	Levels 1, 2, 3, 4, 5[1], 6, 7, 8	Set the volume of the touch field tone
	Heating up signal	On[1] Off	The signal tone sounds when the appliance reaches the required temperature when heating up.
	Signal volume	Levels 1, 2, 3, 4, 5[1], 6, 7, 8	Set the volume of the signal tone
	Time format	AM/PM 24h[1]	Set the 24-hour format set or 12-hour format
	Time	Current time	Set the time

[1] Factory setting (may vary according to model)

Display	Basic setting	Selection	Description
	Clock change	Manual[1] Automatic	Automatic conversion of the time when changing from summer time to winter time
	Date format	D.M.Y[1] D/M/Y M/D/Y	Set the date format
	Date	Current date	Set the date. Press › to switch between the year, month and day.
	Temperature unit	°C[1] °F	Set the temperature unit
	Weight unit	kg[1] oz.	Set the weight unit
	Language	German[1] French [...] English	Set the language for the text display The system restarts when you change the language. The restart takes a few seconds. After restarting, the appliance closes the basic settings menu.
	Factory settings	Restoring the appliance to the factory settings	The question: "Delete all individual settings made and reset to factory settings?" must be confirmed with ✔ or cancelled with ✘. When restoring factory settings, the appliance will delete individual recipes. After restoring factory settings, the "Initial settings" menu is displayed.
	Demo mode	On[1] Off	The demo mode is used for demonstration purposes only. The appliance does not heat up in demo mode. All other functions are available. The "Off" setting must be activated for normal operation. The setting is only possible in the first 3 minutes after connecting the appliance.

[1] Factory setting (may vary according to model)

Display	Basic setting	Selection	Description
	Demo cleaning programme	Start the demo cleaning programme	The demo cleaning programme is provided for demonstration purposes only. The programme has no cleaning function or heating function. The demo cleaning programme takes 10 minutes. You can end the programme at any time. You need a new or used standard cleaning cartridge. Manually dry the cooking compartment after the end of the programme.
	Long-term timer	Not available[1] Available	Available: You can set the long-term timer → *Page 17*.
	Display the estimated cooking time with core temperature probe	On[1] Off	On: If you are using the core temperature probe, the display shows the estimated cooking time.
	Door lock	Off[1] On	The door lock prevents the appliance door from opening accidentally. With the "On" setting, press and hold for several seconds until the door opens.
	Childproof lock	Not available[1] Available	Available: You can activate the childproof lock → *Page 17*.
	Home network	LAN / WLAN Connection type Connection Connect to app Software update Remote control Permanent remote start Delete network settings Appliance information	Select settings for the connection to the home network and mobile devices The display shows different setting options depending on the connection status.

[1] Factory setting (may vary according to model)

15.2 Changing the basic settings

1. Turn the function selector to S.
2. Use the rotary selector to select "Basic settings".
3. Press ✔.
4. Use the rotary selector to select the required basic setting.
5. Press .
6. Use the rotary selector to set the basic setting.
7. Press ✔ to save, or press ✘ to cancel and exit the current basic setting.
8. Turn the function selector to 0 to exit the basic settings menu.

✔ The changes are saved.

16 Cleaning and servicing

To keep your appliance working efficiently for a long time, it is important to clean and maintain it carefully.

16.1 Cleaning agents

To avoid damaging the various surfaces on the appliance, do not use any unsuitable cleaning agents.

⚠ WARNING – Risk of electric shock!

An ingress of moisture can cause an electric shock.

- ▸ Do not use steam- or high-pressure cleaners to clean the appliance.

⚠ WARNING – Risk of burns!

The appliance and its parts that can be touched become hot during use.

- ▸ Caution should be exercised here in order to avoid touching heating elements.
- ▸ Young children under 8 years of age must be kept away from the appliance.

⚠ WARNING – Risk of injury!

Scratched glass in the appliance door may develop into a crack.

- ▸ Do not use any harsh or abrasive cleaners or sharp metal scrapers to clean the glass on the appliance door, as they may scratch the surface.

ATTENTION!

Unsuitable cleaning agents damage the surfaces of the appliance.

- ▸ Do not use harsh or abrasive cleaning products.
- ▸ Do not use cleaning products with a high alcohol content.
- ▸ Do not use hard scouring pads or cleaning sponges.
- ▸ Do not use any special cleaners for cleaning the appliance while it is hot.

New sponge cloths contain residues from production.

- ▸ Wash new sponge cloths thoroughly before use.

Using oven cleaner in a hot cooking compartment damages the stainless steel surfaces.

- ▸ Never use oven cleaner in the cooking compartment when it is still warm.
- ▸ Remove all food remnants from the cooking compartment and the appliance door before you next heat up the appliance.

Suitable cleaning agents

Only use cleaning agents that are suitable for the different surfaces on your appliance.

Appliance door

Area	Suitable cleaning agents	Information
Door panel	■ Glass cleaner	Do not use a glass scraper. Clean with a window cloth or a microfibre cloth.
Door seal	■ Hot soapy water	Clean with a dishcloth. Do not remove or scrub. Do not use metal scrapers or glass scrapers for cleaning.
Display	■ Soapy water	Wipe down using a microfibre cloth or a slightly damp cloth. Do not wipe with a wet cloth

Cooking compartment

Area	Suitable cleaning agents	Information
Cooking compartment inner walls	■ Hot soapy water	Clean with a dish cloth and dry with a soft cloth. Stainless steel cleaner that is suitable for the appliance can be obtained from customer service or online. To prevent corrosion, remove any patches of limescale, grease, starch or albumin (e.g. egg white) from stainless steel surfaces immediately. Corrosion may form under such stains. Do not use oven spray or other aggressive oven cleaners or abrasive materials. Scouring pads, rough sponges and pan cleaners are unsuitable. These items scratch the surface. Always dry the cooking compartment after cleaning. → *"Drying programme", Page 31* **Note:** Undissolved detergent causes patches to appear when heating up and these patches cannot be removed. Thoroughly remove residues from detergents or care products using clean water before drying the cooking compartment.

Area	Suitable cleaning agents	Information
Very dirty cooking compartment	■ Cleaning programme	The cleaning programme → *Page 29* removes stubborn dirt.
Glass ceramic grilling surface	■ Glass ceramic cleaner	Regularly clean with glass ceramic cleaner. Do not use a glass scraper.
Glass cover for the cooking compartment light	■ Hot soapy water	Clean with a dishcloth.
Water tank	■ Hot soapy water ■ Dishwasher	To remove residual detergent after cleaning, rinse thoroughly with clean water. Clean in the dishwasher as necessary. Remove the lid and place the water tank upside down in the dishwasher. **Note:** Before fitting the lid, ensure that the suction hose is free of residues. → *"Check the water tank", Page 35* After cleaning, leave the water tank to dry with the lid open.
Wire racks	■ Dishwasher ■ Hot soapy water	**Note:** If required, remove the shelf supports for cleaning. → *"Removing the shelf supports", Page 32* In the event of heavy soiling, leave to soak and use a brush.
Cooking container, wire rack	■ Dishwasher ■ Hot soapy water	Soak burnt-on remnants and remove with a brush. Light-coloured patches on stainless steel are caused by protein residues. Remove these stains with lemon juice. Rinse thoroughly with clean water.
Core temperature probe	■ Hot soapy water	Wipe with a damp cloth Do not clean in the dishwasher.

16.2 Microfibre cloth

The honeycomb microfibre cloth is especially suitable for cleaning easily damaged surfaces, such as glass, glass ceramic, stainless steel or aluminium. The microfibre cloth removes liquid and greasy deposits in one go.
The microfibre cloth can be obtained from customer service or from the online shop.

16.3 Cleaning the drain filter

1. If necessary, clean the drain filter.
   When cooking fish or meat, we recommend cleaning the appliance after each use.
2. Turn the drain filter anticlockwise ① and remove it ②.

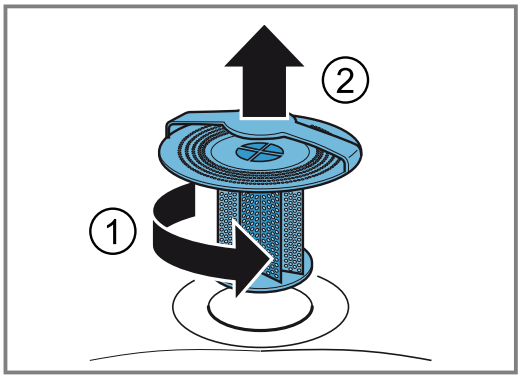

3. Remove any food remnants from the drain filter.

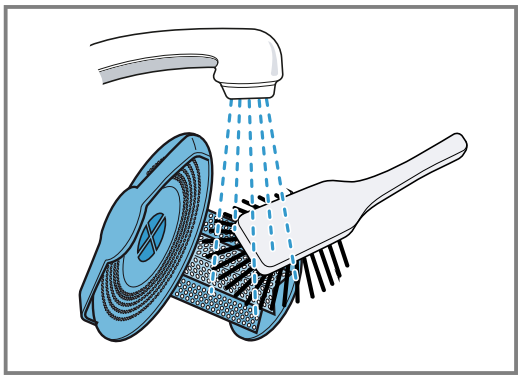

4. If it is very dirty, rinse out the drain filter under running water or clean it in the dishwasher.
5. Insert the drain filter and turn it clockwise as far as it will go.

Note: Never operate the combi-steam oven without the drain filter in place.

16.4 Cleaning programme

The cleaning programme removes stubborn dirt using a cleaning cartridge, and cleans, rinses and dries the cooking compartment fully automatically. You need special cleaning cartridges for the cleaning programme.

ATTENTION!

Heat may melt the cleaning cartridge and damage the cooking compartment.

- Use cleaning cartridges for the cleaning programme only.
- Never place cleaning cartridges in the cooking compartment when it is hot or heat them up in the cooking compartment.

Screw a cleaning cartridge in at the top of the [a] appliance. Ensure that the drain filter remains inserted in the cooking compartment floor while the cleaning programme is in progress. If you remove the drain filter [b] before the cleaning programme is started, the cooking compartment will not be clean.

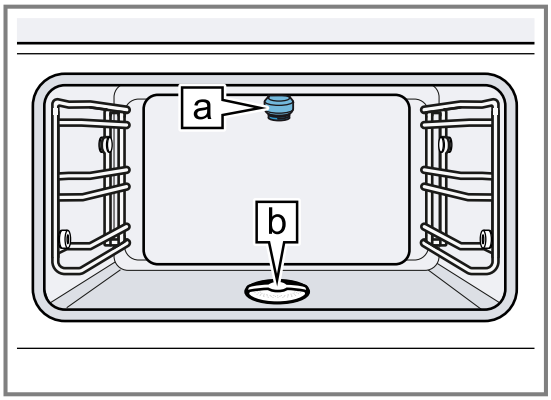

The cleaning cartridges can be obtained from customer service or from the online shop. You can only use the cleaning cartridges once and cannot refill them. Do not use any other cleaning products.

The cleaning programme takes approx. 4 hours 20 minutes from beginning to end. The cleaning programme runs automatically. After approx. 3 hours 40 minutes, drain the two water tanks and fill the freshwater tank.

With normal use, we recommend cleaning the appliance with the cleaning programme four times a year. Depending on how you use your appliance, more frequent cleaning may be required.

If there are a lot of food remnants, do not allow them to burn on. Start the cleaning programme as soon as the appliance has cooled to 40 °C.

You can check the temperature in the cooking compartment by touching the **i** symbol.

You can only restart the cleaning programme once the appliance has cooled down to below 40 °C.

Remove all accessories from the cooking compartment before you start the cleaning programme. Remove the wire rack, the cooking container and the core temperature probe.

The appliance door remains locked while the cleaning programme is in progress. Do not attempt to open the appliance door while the cleaning programme is in progress. The water may escape from the cooking compartment.

The noise from the appliance fan is louder when the cleaning programme is in progress. This is normal. Always allow the cleaning programme to run to the end. You cannot cancel the cleaning programme.

Selecting the switch-off time

1. Set the function selector to S.
✔ The display shows .
2. Press ✔ to confirm.
✔ The display shows the switch-off time at which the cleaning programme will end.
3. If required, you can use the rotary selector to delay the switch-off time.
✔ The appliance moves the start time and switch-off time. The cleaning time remains the same.

Preparing the appliance for the cleaning programme

⚠ **WARNING – Risk of chemical burns!**

The cleaning agent solution may cause chemical burns in the mouth, throat and eyes or on the skin.

- Follow the safety instructions on the packaging of the cleaning cartridges.
- Do not drink the cleaning agent solution.
- The cleaning agent solution must not come into contact with food.
- Clean the water tank in the dishwasher before you next use the appliance.
- Dispose of the empty cleaning cartridge along with your household waste in accordance with the regional regulations.

ATTENTION!

Heat may damage the inserted cartridge.

- Never heat up the appliance if you have inserted the cartridge.

1. Remove all accessories from the cooking compartment.
2. Remove coarse dirt.
3. Press ✔ to confirm.
4. Ensure that the drain filter remains inserted in the cooking compartment floor while the cleaning programme is in progress.

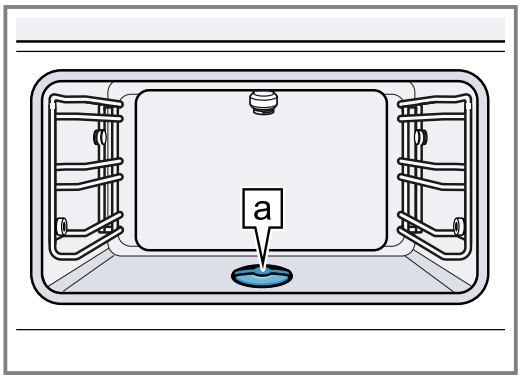

If you remove the drain filter [a] before the cleaning programme is started, the cooking compartment will not be clean.

5. Remove and clean the process-water tank.
6. Fill both water tanks each with 1.7 l water and insert them into the appliance.
7. Press ✔ to confirm.
8. In order to release the cleaning powder, gently tap the cartridge gently against the worktop.

9. Remove the cap from the cleaning cartridge.
   – Do not remove the wax plug from the opening of the cleaning cartridge.
   – Do not use any other cleaning products.
   – Do not use cartridges if they are damaged.

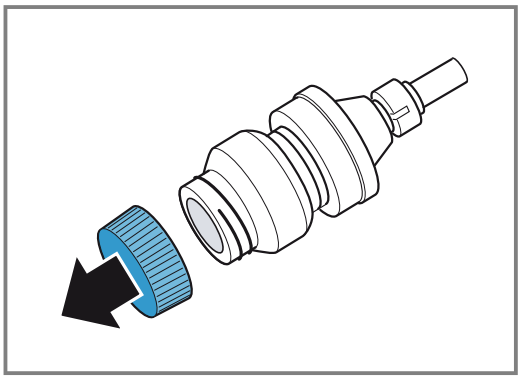

10. Screw the cleaning cartridge [a] fully into the socket in the top of the cooking compartment.

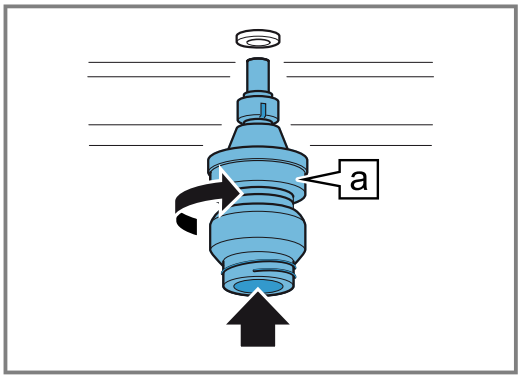

Starting the cleaning programme

1. Close the appliance door.
2. Press ✔ to confirm.
✔ The display shows the cleaning time.
3. Press ▶ to start.
✔ The cleaning time counts down on the display.
✔ The light in the cooking compartment remains switched off.
✔ The appliance is locked.
✔ After approx. 3 hours 40 minutes, the display shows a message.

Emptying the water tank

⚠ WARNING – Risk of scalding!

The water in the water tanks is hot.

▸ Carefully remove and empty the water tanks.

1. Remove both water tanks.
2. Clean both water tanks.
3. Fill the fresh-water tank with cold water up to the "Max." mark.
4. Slide both water tanks into the appliance.
5. Press ✔ to confirm.
6. Press ▶ to continue.
✔ Once the cleaning programme has finished, a signal tone sounds.
✔ The appliance unlocks the appliance door.
✔ The display shows a message.

Ending the cleaning programme

1. Remove the cleaning cartridge.
2. Turn the drain filter in the cooking compartment floor anticlockwise ① and remove it ②.

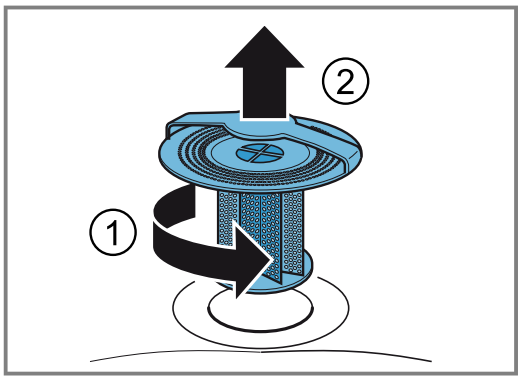

3. Remove any food remnants from the drain filter.
4. Rinse out the drain filter under running water.

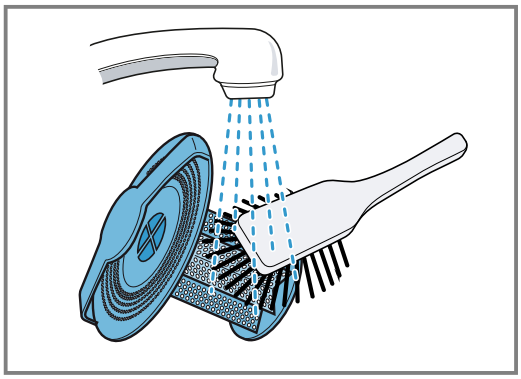

5. Press ✔ to confirm.
✔ The cleaning programme has now ended.
6. Allow the appliance to cool down.
7. Polish the cooking compartment and door pane with a soft cloth.
   – If required, remove the white streaks in the cooking compartment and on the door pane with a damp cloth.

   Depending on the water hardness, the final rinse may leave white streaks in the cooking compartment and on the door pane after drying.
8. Once the cleaning programme has finished, drain and clean the fresh-water tank, process-water tank and tank lids in the dishwasher.
9. Dispose of the empty cleaning cartridge along with your household waste in accordance with the regional regulations.

Causes of an unsatisfactory cleaning result

⚠ WARNING – Risk of injury!

The cleaning agent solution may cause chemical burns in the mouth, throat and eyes or on the skin.

▸ To prevent the detergent from coming into contact with your skin or eyes, do not remove the locking cap from a spent cartridge.

Possible cause	Solution
The locking cap is still on the cleaning cartridge.	After the end of the cleaning programme, remove the cleaning cartridge from the appliance. Do not reuse the cleaning cartridge. Dispose of the cleaning cartridge in accordance with the regional regulations.
The drain filter is missing.	Ensure that the drain filter remains inserted in the cooking compartment floor while the cleaning programme is in progress.
The power has failed.	Following a power cut that lasts longer than 3 minutes, the cleaning programme is ended with a short programme.
Dirt is heavily baked on.	Run the cleaning programme again to remove stubborn dirt.

16.5 Drying programme

You can use the drying programme to dry the cooking compartment quickly after cleaning or steaming.
The drying programme runs for 20 minutes.

ATTENTION!

Heat damages the water tank.

- ▸ Do not dry the water tank in the hot cooking compartment.

Starting the drying programme

1. Set the function selector to S.
2. Use the rotary selector to select the drying programme.
- ✔ The display shows .
3. Press ✔ to confirm.
- ✔ The display shows the drying time as 20 minutes.
4. Press ▶ to start.
- ✔ The display shows the drying time that has elapsed.
- ✔ The light in the cooking compartment remains switched off.
- ✔ A signal tone sounds after 20 minutes.
- ✔ The display shows a message.
5. Press ✔ to confirm.
- ✔ The drying programme has ended.
6. Allow the appliance to cool down.
7. Polish the cooking compartment and door pane with a soft cloth.

16.6 Descaling programme

You can use the descaling programme to descale, rinse and dry the appliance fully automatically. If you descale the appliance regularly, your appliance will be in a good condition.

ATTENTION!

Limescale may damage the appliance.

- ▸ Descale the appliance regularly.

Using the wrong descaler may damage the appliance.

- ▸ Only use the specified descaling tablets.

The descaling tablet may damage the cooking compartment.

- ▸ Use the descaling tablet for the descaling programme only.
- ▸ Place the descaling tablet into the water tank.
- ▸ Never place the descaling tablet in the cooking compartment or heat it up in the cooking compartment.

The descaling tablets can be obtained from customer service, our website or the online shop.
Depending on the water hardness and the use of the appliance, a message on the display reminds you to run the descaling programme.
To prevent damage to the appliance, the appliance locks the operating modes that use steam after this message has been repeated. You can still use the appliance to run operating modes that do not require steam. You can only use the appliance without any restrictions after you have run the descaling programme.
The descaling programme takes 1 hour 50 minutes from beginning to end. After 1 hour 30 minutes, empty, clean and refill the water tank.

Preparing the descaling programme

⚠ **WARNING – Risk of scalding!**

The descaling tablets may cause chemical burns in the mouth, throat, eyes and on the skin.

- ▸ Follow the safety instructions on the packaging of the descaling tablets.
- ▸ Avoid the skin coming into contact with the descaling tablets.
- ▸ Keep children away from the descaling tablets.

The descaling solution may cause chemical burns in the mouth, throat and eyes or on the skin.

- ▸ Avoid the skin coming into contact with the descaling solution.
- ▸ Keep children away from the descaling solution.
- ▸ Do not drink the descaling solution.
- ▸ The descaling solution must not come into contact with food.
- ▸ Clean the water tank in the dishwasher or thoroughly by hand before you next use the appliance.

ATTENTION!

Using the wrong descaler may damage the appliance.

- ▸ Only use the specified descaling tablets.

1. Set the function selector to S.
2. Use the rotary selector to select the descaling programme.
   You cannot cancel the descaling programme. Always allow the descaling programme to run to the end.
- ✔ The display shows .
3. Press ✔ to confirm.
4. Remove all accessories from the cooking compartment.
5. Remove the fresh-water tank from the appliance and take off the lid.
6. Remove the descaling tablet from the plastic packaging.

7. Place the descaling tablet in the compartment at the back of the fresh-water tank.

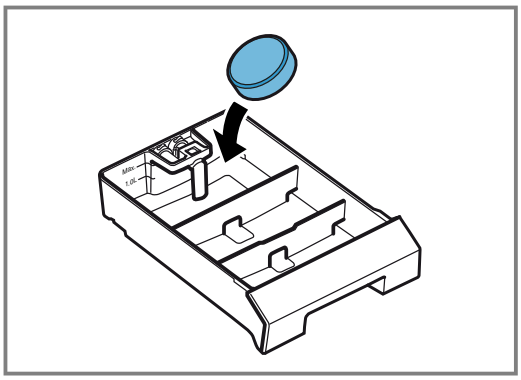

8. Position the lid on the fresh-water tank and click it into place.
9. Fill the fresh-water tank up to the "Max" mark with 1.7 l cold water.

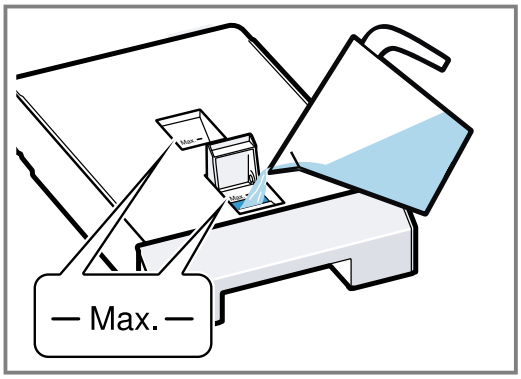

10. Slide the fresh-water tank back in as far as it will go.

Starting the descaling programme

1. Close the appliance door.
2. Press ✔ to confirm.
- ✔ The display shows the descaling time as 1.50 hours.
3. Press ▶ to start.
- ✔ The descaling time counts down on the display.
- ✔ The light in the cooking compartment remains switched off.
- ✔ After approx. 1 hour 30 minutes, the display shows a message.

Continuing the descaling programme

⚠ WARNING – Risk of scalding!

The descaling solution may cause chemical burns in the mouth, throat and eyes or on the skin.

- ▸ Avoid the skin coming into contact with the descaling solution.
- ▸ Keep children away from the descaling solution.
- ▸ Do not drink the descaling solution.
- ▸ The descaling solution must not come into contact with food.
- ▸ Clean the water tank in the dishwasher or thoroughly by hand before you next use the appliance.

1. Drain the process-water tank.
2. Thoroughly clean the process-water tank and insert it into the appliance.
3. Clean the fresh-water tank thoroughly.
4. Fill the fresh-water tank with 1.7 l cold water and insert it into the appliance.
5. Press ✔ to confirm.
- ✔ The appliance starts the rinsing process.
- ✔ Once the descaling programme has finished, a signal tone sounds.
- ✔ The display shows a message.

Cleaning the water tanks

Once the descaling programme has finished, remove any descaler residues from the fresh-water tank and process-water tank.

1. Remove the fresh-water tank and process-water tank from the appliance.
2. Remove the tank lids.
3. Clean the fresh-water tank, process-water tank and tank lids in the dishwasher or thoroughly by hand.

16.7 Removing the shelf supports

The wire racks can be removed for cleaning.

1. Place a dishcloth in the cooking compartment to protect the stainless steel from scratches.
2. Undo the knurled nuts.

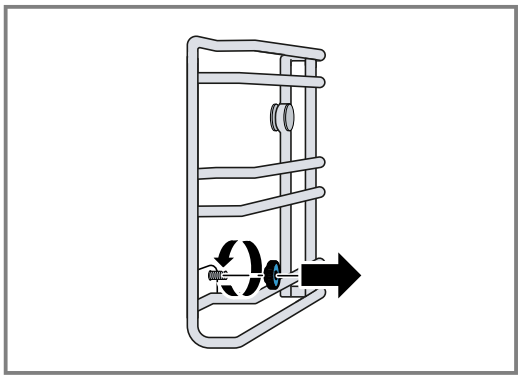

3. Lift the shelf supports slightly sideways away from the screw ① and pull them out towards the front ②.

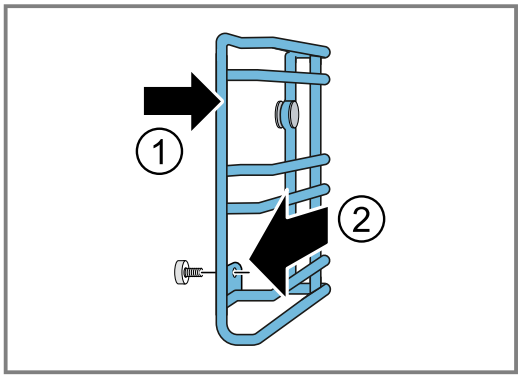

4. Clean the shelf supports in hot soapy water or in the dishwasher.

16.8 Fitting the shelf supports

ATTENTION!

Incorrect spare parts may lead to corrosion in the cooking compartment.

- ▸ Only use the original knurled nuts.

1. Fit the shelf supports the right way round.
   – Position the stop position in the rear area of the cooking compartment.
2. Slide the shelf supports onto the bolts at the back and fit them at the front.
3. Tighten the knurled nuts.

Note: If you lose a knurled nut, you can order this as a spare part from our customer service.

17 Troubleshooting

You can rectify minor faults on your appliance yourself. Read the troubleshooting information before contacting after-sales service. This will avoid unnecessary costs.

⚠ **WARNING – Risk of injury!**
Improper repairs are dangerous.
- ▸ Repairs to the appliance should only be carried out by trained specialist staff.
- ▸ If the appliance is defective, call Customer Service.

⚠ **WARNING – Risk of electric shock!**
Incorrect repairs are dangerous.
- ▸ Repairs to the appliance should only be carried out by trained specialist staff.
- ▸ Only use genuine spare parts when repairing the appliance.
- ▸ If the power cord of this appliance is damaged, it must be replaced with a special connection cable, which is available from the manufacturer or his Customer Service.

17.1 Malfunctions

Fault	Cause and troubleshooting
The appliance is not working.	The mains plug of the power cord is not plugged in. ▸ Connect the appliance to the power supply.
	The circuit breaker in the fuse box has tripped. ▸ Check the circuit breaker in the fuse box.
	There has been a power cut. ▸ Check whether the lighting in your kitchen or other appliances are working.
	Operating error. ▸ Switch off the circuit-breaker for the appliance in the fuse box and switch it back on after approx. 60 seconds.
The appliance does not work. Display shows "Appliance locked. Descaling required."	Build-up of limescale in the appliance. ▸ Start the descaling programme → *Page 31*.
Despite descaling, "Please descale" appears on the display.	Build-up of limescale in the appliance, incorrect descaler used. **1.** Use the specified descaling tablets. **2.** Start the descaling programme → *Page 31*.
The appliance does not start.	The appliance door is not fully closed. ▸ Close the appliance door.
The appliance cannot be started via the Home Connect app.	The appliance is not connected to the Home Connect app. ▸ Start the connection between the appliance and the Home Connect app. → *"Setting up Home Connect", Page 23*
	The appliance is connected to the Home Connect app but the remote control function is not activated. ▸ Activate the remote control function in the Home Connect settings. → *"Home Connect settings", Page 23*
	The function selector is not located at the light position. ▸ Turn the function selector to the light position.
The appliance does not work. The display shows E182.	The appliance does not receive water. **1.** Check the water tank. → *Page 35* **2.** If the display shows the error message again, contact customer service → *Page 56*.
The appliance does not work. The display does not respond. The display shows the symbol for the childproof lock 🔒.	Childproof lock is activated. ▸ Deactivate the childproof lock. → *Page 17*

Fault	Cause and troubleshooting
The appliance automatically switches off.	Safety switch-off function: No operation for more than 12 hours. **1.** Press ✔ to confirm the message. **2.** Switch off the appliance. **3.** Implement the settings again.
The appliance does not heat up; the display shows the symbol for demo mode.	The appliance is in demo mode. ▸ Deactivate the demo mode in the basic settings → *Page 24*.
The appliance cannot be started; the display shows a message.	The water tank is empty. ▸ Fill the water tank. → *"Fill the water tank", Page 14*
The core temperature probe is inserted; the display shows 99 °C.	Moisture on the core temperature probe plug or on the socket in the cooking compartment. ▸ Insert and remove the plug for the core temperature probe in the socket in the cooking compartment several times.
The core temperature probe is inserted, but the display does not show the core temperature probe symbol.	Moisture on the socket in the cooking compartment. ▸ Insert and remove the plug for the core temperature probe in the socket in the cooking compartment several times.
No steam is visible.	Water vapour above 100 °C is not visible. ▸ This is normal. No action required.
Powerful steam release at the top of the door.	You have changed the operating mode. ▸ This is normal. No action required.
Powerful steam release at the side of the door.	The door seal is dirty or loose. **1.** Clean the door seal. **2.** Insert the door seal into the groove.
Humming noise when switching on.	The drain pump starts running. ▸ Normal operating noise No action required.
	The appliance has been switched off for a few days. Automatic rinsing during initial use. ▸ Normal: Automatic rinsing during initial use. No action required.
A whistling noise occurs during heating.	Noises may occur during steam generation. ▸ This is normal. No action required.
A "plop" sound can be heard during cooking.	Voltage expansion when the temperature difference is large. ▸ This is normal. No action required.
Steaming is not possible.	Build-up of limescale in the appliance. The appliance must be descaled to avoid damage to the appliance. ▸ Start the descaling programme → *Page 31*.
The appliance is no longer producing steam correctly.	Build-up of limescale in the appliance. ▸ Start the descaling programme → *Page 31*.
The lighting does not work.	The lighting is defective. ▸ Call the after-sales service. → *"Customer Service", Page 56*
Process-water tank cannot be removed.	The process-water tank remains locked for a short time after cooking has finished. ▸ Wait until the appliance opens the lock.

Fault	Cause and troubleshooting
The display shows "Empty left-hand water tank" even though you inserted the left-hand water tank while it was empty.	The side panel of the water tank is dirty. **1.** Clean and empty the water tank. **2.** Insert the water tank into the appliance.
	There is water, dirt or limescale in the insertion shaft. ▸ Clean and dry the insertion shaft.
The display shows the error message "Exx".	An error occurred. **1.** If the display shows an error message, turn the function selector to 0. ✔ If the display no longer shows the error message, it was a one-off problem. **2.** If the display continues to show or repeatedly shows the error message, contact customer service → *Page 56* and provide them with the error code.
Water drips out when you open the appliance door.	The collecting channel on the underside of the door panel is full. ▸ Dry the collecting channel with a sponge.
An unpleasant smell occurs during heating.	The appliance is new. ▸ Before using it for the first time, heat the appliance at 60% humidity and 200 °C for one hour. → *"Heating up the appliance", Page 14*

17.2 Power failure

Your appliance can bridge a power failure of a few seconds. The operation continues.
If the power failure lasts longer and the appliance was operating, the display shows a message. The operation is interrupted.

Switch the appliance back on again after a power failure

1. Turn the function selector to 0.
2. Switch the appliance back on again as usual.

17.3 Check the water tank

1. Turn the function selector to 0.
2. Remove the right-hand water tank.
3. Remove the tank lid.
4. Remove the suction hose a and clean it under running water.

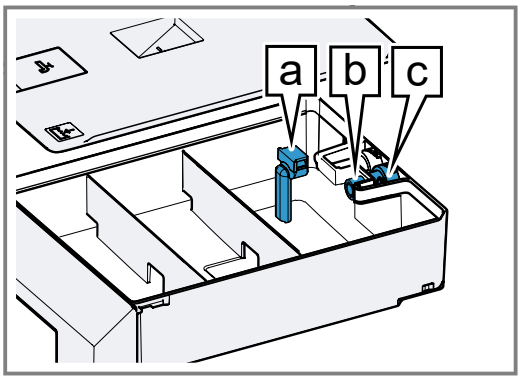

5. Check whether the suction hose is free of residues.
6. Check whether the filter b is free of residues at the discharge valve c.
7. Fully fit the suction hose a.
   – Ensure that the suction hose is not kinked.

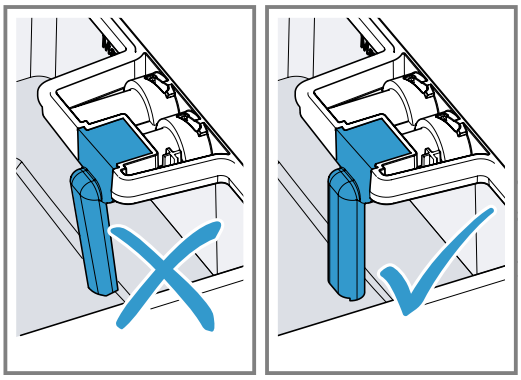

8. Fit the tank lid.

17.4 Demo mode

If the display shows , demo mode is activated. The appliance does not heat up.

Deactivate demo mode

1. To briefly disconnect the appliance from the mains, switch off the household fuse or the circuit breaker in the fuse box.
2. Deactivate demo mode within 3 minutes in the basic settings → *Page 24*.

18 Disposal

Find out here how to dispose of old appliances correctly.

18.1 Disposing of old appliance

Valuable raw materials can be reused by recycling.

1. Unplug the appliance from the mains.
2. Cut through the power cord.
3. Dispose of the appliance in an environmentally friendly manner.
   Information about current disposal methods are available from your specialist dealer or local authority.



This appliance is labelled in accordance with European Directive 2012/19/EU concerning used electrical and electronic appliances (waste electrical and electronic equipment - WEEE).
The guideline determines the framework for the return and recycling of used appliances as applicable throughout the EU.

19 How it works

Here, you can find the ideal settings for various types of food as well as the best accessories and cookware. We have perfectly tailored these recommendations to your appliance.

19.1 General cooking tips

Take note of the following information when cooking all types of food.

- The cooking times specified are intended as a guide. The actual cooking time depends on the quality and temperature of the food before cooking, as well as its weight and thickness.
- The values given refer to average quantities for 4 people. If you want to prepare a larger amount, expect a longer cooking time.
- Use the cookware specified. If you use other cookware, the cooking time may be longer or shorter.
- Always use plates, baking tins or ovenproof dishes with the wire rack.
- If you have not made a particular dish before, start with the shortest specified time. If required, you can continue to cook the food.
- Open the cooking compartment door on the preheated oven for a short time only and quickly place your food inside the appliance.
- When steaming, defrosting, dough proving and reheating, you can use up to 3 shelf levels at a time (shelf levels 1, 2 and 3). This will not cause the flavour to transfer. You can therefore cook fish, vegetables and desserts at the same time. The specified cooking times may need to be extended for large quantities of food.
- If you are only baking on one level, use level 2. If you are baking on two levels at the same time, use levels 1 and 3.
- Ensure that the food does not lie against the cooking compartment or the back panel.
- The appliance door must shut properly. Keep the seal surfaces clean at all times.
- To ensure optimal steam circulation, do not position the racks and containers too closely.
- When cooking very cold foods and when cooking at high temperatures, the cooking container may deform. This deformation has no effect on the function. When the cooking container cools down again, it returns to its original shape.
- If the appliance is above 100 °C, allow the appliance to cool down before steaming. Otherwise, the high temperature causes the food to dry out.
- When steaming at temperatures up to 100 °C, no preheating is necessary. Place the food in the cold cooking compartment and then switch on the appliance.

19.2 Vegetables

Take note of the recommended settings for vegetables.

- Vegetables are prepared better in steam than in boiling water: The taste, colour, and consistency are retained better. Virtually none of the water-soluble vitamins and nutrients are washed out.
- All of the information refers to 1 kg washed vegetables.
- To steam vegetables, use the perforated cooking container. Slide the perforated cooking container in at the second level from the bottom. Slide the unperforated cooking insert into the level below this. You can use the vegetable broth that is collected here as the basis for a sauce or a vegetable stock.
- Blanch for 8 to 10 minutes in the preheated appliance. If you are not serving the vegetables or fruit immediately, chill them in ice water to prevent continued cooking due to residual heat.

Vegetables

Food	Accessory/cookware	Temperature in °C	Type of heating	Humidity in %	Cooking time in min.	Comments
Artichokes, large	Perforated steaming tray	100	100%	100	60-65	
Artichokes, small	Perforated steaming tray	100	100%	100	45-50	

Food	Accessory/cookware	Temperature in °C	Type of heating	Humidity in %	Cooking time in min.	Comments
Cauliflower, whole	Perforated steaming tray	100	100%	100	25-30	
Cauliflower, in florets	Perforated steaming tray	100	100%	100	15-25	
Beans, green	Perforated steaming tray	100	100%	100	35-50	
Broccoli, in florets, in accordance with EN 60350-1	Perforated steaming tray	90-100	100%	100	20-25	
Chicory	Perforated steaming tray	100	100%	100	25-30	
Peas, fresh	Unperforated steam container	100	100%	100	25-30	Cover with water
Fennel, sliced	Perforated steaming tray	100	100%	100	20-25	
Vegetable terrine	Perforated steaming tray or Terrine mould	90	100%	100	50-60	
Peas, frozen, in accordance with EN 60350-1, 3 kg	Perforated steaming tray	100	100%	100	35-45	
Carrots, in 0.5 cm slices	Perforated steaming tray	100	100%	100	20-25	
Potatoes, peeled and quartered	Perforated steaming tray	100	100%	100	30-35	
Kohlrabi, sliced	Perforated steaming tray	100	100%	100	25-35	
Leeks, sliced	Perforated steaming tray	100	100%	100	20-30	
Leeks, whole	Perforated steaming tray	100	100%	100	35-45	
Peppers, stuffed	Perforated steaming tray	180-200	100% or 80%	100 or 80	20-25	Preheat. If stuffing with meat, sear the meat beforehand.
Potatoes boiled in the skin, approx. 50 g each	Perforated steaming tray	100	100%	100	30-35	
Potatoes boiled in the skin, approx. 100 g each	Perforated steaming tray	100	100%	100	35-40	
Brussels sprouts	Perforated steaming tray	100	100%	100	25-30	
Beetroot, sliced	Perforated steaming tray	100	100%	100	65-75	
Asparagus, green	Perforated steaming tray	100	100%	100	15-20	
Asparagus, white	Perforated steaming tray	100	100%	100	20-35	
Spinach	Perforated steaming tray	100	100%	100	8-12	Then sweat in a pan with onions and garlic.
Sweet potatoes, sliced	Perforated steaming tray	100	100%	100	15-20	

Food	Accessory/cookware	Temperature in °C	Type of heating	Humidity in %	Cooking time in min.	Comments
Peeling tomatoes	Perforated steaming tray	100	100%	100	3-4	Preheat. Cut the tomatoes, and rinse with ice-cold water after steaming.
Courgettes, sliced	Perforated steaming tray	100	100%	100	15-20	
Mangetouts	Perforated steaming tray	100	100%	100	10-15	

19.3 Fish

Take note of the recommended settings for fish.

- Steaming is a cooking method that does not use any fat and does not allow the fish to dry out.
- For food hygiene reasons, ensure that fish has a core temperature of at least 62 to 65 °C after cooking. This is also the ideal cooking temperature.
- To ensure that the natural flavour is retained and that less water is removed from the fish, do not season the fish with salt until after cooking.
- When using the perforated cooking container: You can grease the container if the fish sticks too much.
- Slide the unperforated cooking insert into the first level from the bottom to avoid getting fish stock on the cooking compartment surfaces.
- For fillets with skin: Place the fish on the rack or tray with the skin side up – this helps to retain its texture and flavour.

Fish – steaming fish

Food	Accessory/cookware	Temperature in °C	Type of heating	Humidity in %	Cooking time in min.	Comments
Sea bream, whole, 500 g each	Perforated steaming tray	100	100%	100	20-30	Can be cooked in the swimming position if placed on half a potato.
Fish dumplings, 20-40 g each	Unperforated steam container	90-100	100%	100	8-12	Line the cooking container with greaseproof paper.
Prawns	Unperforated steam container	80	100%	100	10-12	
Lobster, cooked, removed from the shell, reheating	Perforated steaming tray	70-80	100%	100	10-15	
Carp, rare, whole, 1.5 kg	Unperforated steam container	90-100	100%	100	35-45	In stock
Cod, 250 g	Unperforated steam container	180	60%	60	8-12	
Salmon fillet, 150 g each	Perforated steaming tray	80	100%	100	20-25	
Salmon, whole, 2.5 kg	Perforated steaming tray	100	100%	100	65-75	
Blue mussels, 1.5 kg	Perforated steaming tray	100	100%	100	12-15	Blue mussels are cooked once the shell has opened up.
Pollock, whole, 800 g	Perforated steaming tray	90-100	100%	100	20-25	
Monkfish fillet, 300 g each	Glass dish	180-200	100%	100	8-10	Preheat.
Sea bass, whole, 400 g each	Perforated steaming tray	90-100	100%	100	20-25	

19.4 Fish – low-temperature steaming

Use low-temperature steaming to cook fish.

- If you steam the fish at between 70 and 90 °C, it is less likely to be overcooked or to fall apart. Steaming at these temperatures is particular advantageous for delicate fish.
- The values given for the different types of fish refer to fillets.
- Slide the unperforated cooking insert into the first level from the bottom to avoid getting fish stock on the cooking compartment surfaces.
- Serve on a pre-warmed dish.
- With low-temperature steaming, no preheating is necessary. Place the food in the cold oven and then switch on the appliance.

Fish

Food	Accessory/cookware	Temperature in °C	Type of heating	Humidity in %	Cooking time in min.	Comments
Oysters, 10 pcs	Unperforated steam container	80-90	100%	100	7-10	In stock
Tilapia, 150 g each	Perforated steaming tray	80-90	100%	100	15-17	
Sea bream, 200 g each	Perforated steaming tray	80-90	100%	100	17-20	
Fish fillet, 200-300 g each	Perforated steaming tray	80-90	100%	100	17-20	
Fish terrine	Terrine mould	80-90	100%	100	50-90	
Trout, whole, 250 g each	Perforated steaming tray	80-90	100%	100	17-20	
Halibut, 300 g each	Perforated steaming tray	80-90	100%	100	17-20	
Scallops, 15-30 g each	Unperforated steam container	80-90	100%	100	9-13	The more the scallops weigh, the longer the chosen cooking time should be.
Cod, 250 g	Perforated steaming tray	80-90	100%	100	15-17	
Red snapper, 200 g each	Perforated steaming tray	80-90	100%	100	17-20	
Ocean perch, 120 g each	Perforated steaming tray	80-90	100%	100	15-17	
Monkfish, 200 g each	Perforated steaming tray	80-90	100%	100	15-17	
Sole rolls, stuffed, 150 g each	Perforated steaming tray	80-90	100%	100	17-20	
Turbot, 300 g each	Perforated steaming tray	80-90	100%	100	17-20	
Sea bass, 150 g each	Perforated steaming tray	80-90	100%	100	15-17	
Pikeperch, 250 g each	Perforated steaming tray	80-90	100%	100	17-20	

19.5 Meat – cooking at higher temperatures

Note the recommended settings for cooking at higher temperatures.

- Combining steam and hot air is the best way to cook many types of fish. In this operating mode, the cooking compartment is hermetically sealed and the moisture counteracts the drying effects of the hot air, which is used in conventional cooking. The optimal conditions can be achieved for any type of food thanks to the variable humidity control system.
- The cooking times listed are intended as a guide only and depend heavily on the temperature of the meat at the start of cooking and on how long the meat was seared for. Use the core temperature probe so that you can monitor the core temperature more easily. Information and instructions, as well as optimal target temperatures, can be found in the section entitled Core temperature probe → *Page 20*.
- Take the meat out of the refrigerator 1 hour before you begin preparing it.

- When using the perforated cooking container or the wire rack, slide an unperforated cooking container beneath it. To prevent the food from burning on, pour a little water into the unperforated cooking container. You can also add vegetables, wine, spices and herbs to the unperforated cooking container to make a tasty base for a sauce.
- If you want the meat to be rare or medium rare, open the door when the temperature reaches 5 °C below the required core temperature and wait until the target temperature is reached. If you open the door, you prevent the meat from being overcooked and treat the meat to the necessary time to rest.
- Time to rest: Allow the meat to rest for 5 minutes on a wire rack after cooking. This gives the meat a chance to "relax". The circulation of the meat juice slows and, when the meat is cut, less juice is lost.

Meat

Food	Accessory/cookware	Temperature in °C	Type of heating	Humidity in %	Cooking time in min.	Comments
Entrecôte, seared, medium rare, 350 g each	Unperforated steam container	170-180	30%	30	10-20	
Fillet, seared, medium rare, in puff pastry, 600 g	Unperforated steam container	1. 210 2. 120	1. 60% 2. 60%	1. 60 2. 60	1. 20 2. 30	Line the cooking container with greaseproof paper.
Meat pie	Quiche dish	1. 210 2. 180	1. 60% 2. 60%	1. 60 2. 60	1. 30 2. 15	
Knuckle of veal, 1 kg	Unperforated steam container	1. 180 2. 120	1. 2. 100%	1. - 2. 100	1. 10 2. 120	
Saddle of veal, seared, medium rare, 1 kg	Unperforated steam container	160-180	30% or 60%	30 or 60	20-30	If you have added liquid to the unperforated cooking container, 30% humidity is sufficient.
Smoked pork, cooked, sliced	Unperforated steam container	100	100%	100	15-20	
Roast pork with crackling, joint of pork with crispy skin, well done, 1.5 kg	1. Wire rack 2. Unperforated steam container	1. 160 2. 230	1. 80% 2.	1. 80 2. -	1. 60 2. 10	Cut into the rind to form a cross-hatch pattern before cooking. Use the core temperature probe: In the first stage of cooking, cook the food to a core temperature of up to approximately 65-70 °C and, in the second stage of cooking, cook it up to a core temperature of 70-75 °C.
Saddle of lamb, seared, medium rare, 150 g each	Unperforated steam container	160-170	0% or 30%	0 or 30	12-15	
Leg of lamb, seared, medium rare, 1.5 kg	Unperforated steam container	1. 200 2. 140	1. 2. 30%	1. - 2. 30	1. 30 2. 60-70	
Pulled pork, 1 kg	Unperforated steam container	150	100%	100	110	
Saddle of venison, seared, medium rare, 500 g each	Unperforated steam container	160-170	0% or 30%	0 or 30	12-18	

Food	Accessory/cookware	Temperature in °C	Type of heating	Humidity in %	Cooking time in min.	Comments
Joint of beef, well done, 1.5 kg	1. Wire rack 2. Unperforated steam container	1. 230 2. 160	1. 0% 2. 60%	1. 0 2. 60	1. 15 2. 60-90	If you have added liquid to the unperforated cooking container, 30% humidity is sufficient.
Sirloin, seared, medium rare, 1 kg	Unperforated steam container	170-180	30%	30	50-60	
Joint of pork, neck or shoulder, well done, 1–1.5 kg	1. Wire rack 2. Unperforated steam container	1. 200-220 2. 160-180	1. 100% 2. 60%	1. 100 2. 60	1. 15 2. 40-60	If you have added liquid to the unperforated cooking container, 30% humidity is sufficient.
Sausages, boiled, heating	Unperforated steam container	85-90	100%	100	10-20	E.g. Bologna sausages, Bavarian veal sausages

19.6 Fish and poultry – low-temperature cooking

Take note of the recommended settings for meat and poultry for low-temperature steaming.

- With low-temperature cooking, the dishes are cooked at temperatures between 60 and 80 °C and for a cooking time from a few minutes up to several hours until cooked through. This cooking method is mainly used for meat dishes and fish dishes. The sensory properties of the food, e.g. the tenderness and succulence, are retained with this cooking method. Heating it up gently gives the meat an even, delicate pink colour throughout (other than a very thin edge) and makes it extraordinarily succulent. No turning or basting is required.
- The cooking times listed are intended as a guide only and depend heavily on the temperature of the meat at the start of cooking and on how long the meat was seared for. Use the core temperature probe so that you can monitor the core temperature more easily. Information and instructions, as well as optimal target temperatures, can be found in the section entitled Core temperature probe → *Page 20*.
- Take the meat out of the refrigerator 1 hour before you begin preparing it.
- For food hygiene reasons, sear the meat briefly on all sides at a high temperature in the frying pan before cooking it. This gives the meat a crust, which prevents the meat juices from escaping and produces the kind of flavour characteristic of a roast.
- Season with care: Because the meat develops as it cooks slowly, all of the flavours become more intense.
- When game and horse meat is cooked at low temperatures, its flavour becomes stronger than when prepared the conventional way.
- Use the "Low-temperature cooking" mode . In this mode, any moisture escaping from the food remains in the cooking compartment and prevents the food from drying out.
- With this operating mode, no preheating is necessary.
- Note that the core temperature of the food cannot be higher than the temperature inside the cooking compartment. As a rule of thumb, select an interior temperature that is 10 to 15 °C higher than the required core temperature.
- If your guests arrive late, towards the end of the cooking time, you can reduce the temperature to 60 °C to extend the cooking time. If you want to pause cooking, the temperature in the cooking compartment must be no higher than the required core temperature. Large items can remain in the cooking compartment for 1–1.5 hours, and small items can remain in there for 30–45 minutes.
- Serve on a pre-warmed dish.

Meat/poultry

Food	Accessory/cookware	Temperature in °C	Type of heating	Humidity in %	Cooking time in min.	Comments
Duck breast, medium rare, 350 g each	Unperforated steam container	70-80		-	40-60	After cooking, you can crisp up the skin side quickly in the frying pan. Or: Grill + air recirculation 230 °C for 5 minutes.

Food	Accessory/cookware	Temperature in °C	Type of heating	Humidity in %	Cooking time in min.	Comments
Entrecôte, medium rare, 350 g each	Unperforated steam container	70-80		-	40-70	
Fillet of veal, well done, 1 kg	Unperforated steam container	80-90		-	150-200	
Leg of lamb, boned, tied, medium rare, 1.5 kg	Unperforated steam container	70-80		-	180-240	Turn in garlic and herbs before cooking in oil
Fillet of beef, medium rare, 1 kg	Unperforated steam container	70-80		-	120-180	
Beef steaks, medium rare, 175 g each	Unperforated steam container	70-80		-	30-60	
Sirloin, medium rare, 1-1.5 kg	Unperforated steam container	70-80		-	150-210	
Fillet of pork, well done, 70 g each	Unperforated steam container	90		-	90-115	
Pork medallions, well done, 70 g each	Unperforated steam container	80		-	50-70	

19.7 Poultry

Take note of the recommended settings for poultry.

- The moisture present when the appliance is operating in combination mode prevents food from drying out, which is important for poultry in particular. At the same time, the high temperatures make the surface brown and crispy. The hot steam is able to transfer twice as much heat as conventional hot air, and reaches all parts of the food. The hot steam cooks a chicken, until browned and crispy all round, while the breast meat remains tender and succulent.
- The cooking times listed are intended as a guide only and depend heavily on the temperature of the meat at the start of cooking. Use the core temperature probe so that you can monitor the core temperature more easily. Insert the core temperature probe in the chicken breast rather than in the middle or in a cavity. Further information and instructions, as well as optimal target temperatures, can be found in the section entitled Core temperature probe → *Page 20*.
- To make the skin crispier, season poultry mainly with spices and herbs, and use little or no oil.

Poultry

Food	Accessory/cookware	Temperature in °C	Type of heating	Humidity in %	Cooking time in min.	Comments
Duck, whole, 3 kg	Unperforated steam container	1. 150-160 2. 220	1. 60% 2. 0%	1. 60 2. 0	1. 80-90 2. 20-30	Cook with the breast side facing down. Turn the duck after half the cooking time has elapsed. This prevents the delicate breast meat from drying out as much.
Duck breast, seared, medium rare, 350 g each	Unperforated steam container	160	0%	0	25-30	
Foie gras	Terrine mould	65	100%	100	50	
Chicken, whole, 1.5 kg	1. Unperforated steam container 2. Wire rack	1. 150 2. 230	1. 100% 2.	1. 100 2. -	1. 55-65 2. 15	Tie the thighs together and cook breast side up.
Chicken breast, stuffed, steamed, 200 g each	Perforated steaming tray	100	100%	100	25-30	Recipe tip: Fill with spinach and sheep's cheese.
Turkey breast fillet, steamed, 300 g each	Perforated steaming tray	100	100%	100	17-25	

Food	Accessory/cookware	Temperature in °C	Type of heating	Humidity in %	Cooking time in min.	Comments
Poussin, quail, steamed, 150-200 g each	Perforated steaming tray	100	100%	100	20-25	
Poussin, quail, steamed, 150-200 g each	Unperforated steam container	180-200	60% or 80%	60 or 80	15-20	Recipe tip: Brush with oil and herbes de provence.
Pigeon, steamed, 300 g each	Perforated steaming tray	100	100%	100	25-35	
Pigeon, 300 g each	Unperforated steam container	180-200	60% or 80%	60 or 80	25-30	

19.8 Sous-vide cooking

When sous-vide cooking, you cook the food under a vacuum at low temperatures between 50 and 95 °C and at 100% steam.

⚠ WARNING – Risk of harm to health!

Due to the low sous-vide cooking cooking temperatures, there is a risk to health if you do not follow the instructions for use and hygiene instructions below.

- ▸ Use only fresh, good-quality food.
- ▸ Wash and disinfect your hands. Use disposable gloves or grill tongs.
- ▸ Take extra care when preparing critical food, such as poultry, eggs and fish.
- ▸ Always thoroughly rinse and/or peel fruit and vegetables where necessary.
- ▸ Always keep work surfaces and chopping boards clean. Use different chopping boards for different types of food.
- ▸ Maintain the cold chain. Only interrupt the cold chain briefly to prepare the food. Store vacuum-sealed food back in the refrigerator until it is ready to be cooked.
- ▸ The food is suitable for immediate consumption only. Once the food is cooked, consume it immediately. Do not store it after cooking. Do not store the food in the refrigerator either. The food is not suitable for reheating.

- With this operating mode, no preheating is necessary.
- Sous-vide cooking is a gentle, low-fat method of cooking meat, fish, vegetables and desserts. A vacuum-sealing machine uses heat to hermetically seal the food in a special heat-resistant cooking bag.
- The protective envelope retains the nutrients and flavours. The low temperatures and the direct heat transfer help you to achieve precisely controlled cooking in order to achieve the desired cooking results. It is almost impossible to overcook the food.
- Use the portion sizes listed in the cooking table. For larger quantities and items, adjust the cooking time accordingly. The portions specified for fish, meat and poultry correspond to a single serving. The portions specified for vegetables and desserts correspond to servings for 4 people.
- You can cook on up to two levels. Slide the cooking containers in at levels 1 and 3 to achieve the best cooking results. If you are cooking on just one level, use level 2.
- When using the sous-vide cooking method, only use heat-resistant vacuum-sealing bags designed for this purpose. Do not cook the food in the vacuum-sealing bag in which you bought the food, e.g. portioned fish. These bags are not suitable for sous-vide cooking.
- To ensure an even transfer of heat and a perfect cooking result, use a chamber vacuum-sealing machine that can create a 99% vacuum when vacuum-sealing food.

Vacuum-sealing

When vacuuming, heat-seal the food in a special plastic bag so that it is airtight.
Note the following points when vacuum-sealing:

- There is no/hardly any air in the vacuum-sealing bag.
- The heat-sealed seam is perfectly sealed.
- The vacuum-sealing bag has no holes in it. Do not use a core temperature probe.
- Pieces of meat or fish that have been vacuum-sealed together are not pressed directly against one another.
- You have vacuum-sealed vegetables and desserts as flat as possible.

Before cooking the food, check whether the vacuum in the bag is intact.
If in doubt, place the food into a new bag and vacuum-seal it again. Vacuum-seal food no more than one day before the cooking process. This is the only way to prevent the escape of gases from the food (e.g. from vegetables) which inhibit the transfer of heat, or to prevent the texture of the food from changing, and thus altering how it cooks, as a result of the vacuum pressure.

Quality of the food

The quality of the cooking result is 100% influenced by the quality of the ingredients you use.
Use only fresh, top-quality food. This is the only way to guarantee a consistent cooking result that delivers impeccable flavour.

Cooking

Sous-vide cooking prevents flavours from escaping, intensifying the food's natural flavour. Note that the usual quantities of seasoning and condiments, such as herbs, spices and garlic, will have a much greater effect on the flavour. Start off by halving the quantities you usually use.

If the ingredients are of high quality, it is often sufficient to enclose them in the bag with just a small knob of butter and a little salt and pepper. Generally, the fact that the food's natural flavours intensify during cooking is sufficient on its own to produce a flavourful cooking result.

Do not place the vacuum-sealed food items on top of one another or too close together in the cooking containers. In order to ensure even heat distribution, make sure that you do not touch the food. If you have more than one vacuum-sealing bag, cook on two levels.

Remove the vacuum-sealing bags with care after cooking, as hot water accumulates on the bags. Place the unperforated cooking container into the cooking compartment at the level below the perforated cooking container containing the hot food.

Dry the outside of the bag, place it into a clean, unperforated cooking container and cut it open with scissors. Place all of the food, along with its juices, into the cooking container.

The food can be finished off as follows once the sous-vide cooking stage is complete:

- Vegetables: Flash fry in a frying pan or on the teppan yaki to give them the flavours you would expect from frying. In doing so, you can effortlessly season the vegetables or mix them with other ingredients without the vegetables cooling down.
- Fish: Season and coat with hot butter. Since many types of fish fall apart easily after cooking using the sous-vide method, if you want to flash fry fish, this should be done before the sous-vide cooking stage. Fry the food for longer if has not been sufficiently well cooked during the sous-vide cooking stage.
- Meat: Flash fry at a very high temperature for a few seconds only on each side. This gives the meat a nice crust and the flavours you would expect from frying, without overcooking it. You can achieve a particularly good result using a teppan yaki or under the grill.

Note: Dab the meat with a tea towel before placing it into hot oil, in order to avoid fat spitting out of the pan.

Serve the food on pre-heated plates and, if possible, with a hot sauce or butter as sous-vide cooking takes place at relatively low temperatures.

Sous-vide – meat

Food	Accessory/cookware	Temperature in °C	Heating function	Cooking time in min.	Comments
Entrecôte, rare, 180 g each	Perforated steaming tray	58	100%	100	Once the meat is cooked, sear it on a teppan yaki or grill it briefly at a high temperature on both sides. This gives the meat a nice crust and the flavours you would expect from frying, without overcooking it.
Entrecôte, medium rare, 180 g each	Perforated steaming tray	63	100%	90	Once the meat is cooked, sear it on a teppan yaki or grill it briefly at a high temperature on both sides. This gives the meat a nice crust and the flavours you would expect from frying, without overcooking it.
Entrecôte, well done, 180 g each	Perforated steaming tray	70	100%	85	Once the meat is cooked, sear it on a teppan yaki or grill it briefly at a high temperature on both sides. This gives the meat a nice crust and the flavours you would expect from frying, without overcooking it.
Veal topside steaks, 160 g each	Perforated steaming tray	60	100%	80	Once the meat is cooked, sear it on a teppan yaki or grill it briefly at a high temperature on both sides. This gives the meat a nice crust and the flavours you would expect from frying, without overcooking it.

Food	Accessory/cookware	Temperature in °C	Heating function	Cooking time in min.	Comments
Beef steaks, rare, 180 g each	Perforated steaming tray	58	100%	60	Once the meat is cooked, sear it on a teppan yaki or grill it briefly at a high temperature on both sides. This gives the meat a nice crust and the flavours you would expect from frying, without overcooking it.
Beef steaks, medium rare, 180 g each	Perforated steaming tray	63	100%	50	Once the meat is cooked, sear it on a teppan yaki or grill it briefly at a high temperature on both sides. This gives the meat a nice crust and the flavours you would expect from frying, without overcooking it.
Beef steaks, well done, 180 g each	Perforated steaming tray	70	100%	45	Once the meat is cooked, sear it on a teppan yaki or grill it briefly at a high temperature on both sides. This gives the meat a nice crust and the flavours you would expect from frying, without overcooking it.
Pork medallions, 80 g each	Perforated steaming tray	63	100%	75	Once the meat is cooked, sear it on a teppan yaki or grill it briefly at a high temperature on both sides. This gives the meat a nice crust and the flavours you would expect from frying, without overcooking it.

Sous-vide – poultry

Food	Accessory/cookware	Temperature in °C	Heating function	Cooking time in min.	Comments
Duck breast, 350 g each	Perforated steaming tray	58	100%	70	Once the breast is cooked, fry the skin side in a hot frying pan until it is crispy.
Foie gras, 1 roll, 300 g each	Perforated steaming tray	80	100%	30	Recipe tip: Prepare the goose liver and mix it with other ingredients. Roll it in foil and prick it several times. Vacuum-seal the roll and leave it to chill for several hours in the refrigerator before cooking it using the sous-vide method.
Chicken breast, 250 g each	Perforated steaming tray	65	100%	60	

Sous-vide – fish/seafood

Food	Accessory/cookware	Temperature in °C	Heating function	Cooking time in min.	Comments
Prawns, 125 g each	Perforated steaming tray	60	100%	30	Recipe tip: Vacuum-seal along with some olive oil, salt and garlic.

Food	Accessory/cookware	Temperature in °C	Heating function	Cooking time in min.	Comments
Scallops, 20-50 g each	Perforated steaming tray	60	100%	6-10	The more the scallops weigh, the longer the chosen cooking time should be.
Cod, 140 g each	Perforated steaming tray	59	100%	25	
Salmon fillet, 140 g each	Perforated steaming tray	58	100%	30	If you wish, you can flash fry the salmon fillet in a hot frying pan once it is cooked.
Pikeperch, 140 g each	Perforated steaming tray	60	100%	20	

Sous-vide – vegetables

Food	Accessory/cookware	Temperature in °C	Heating function	Cooking time in min.	Comments
Mushrooms, quartered, 500 g	Perforated steaming tray	85	100%	20	Recipe tip: Vacuum-seal along with some butter, rosemary, garlic and salt.
Chicory, halved, 4-6 pieces	Perforated steaming tray	85	100%	40	Recipe tip: Cut the chicory in half. Vacuum-seal along with some orange juice, sugar, salt, butter and thyme.
White asparagus, whole, 500 g	Perforated steaming tray	85	100%	45	Recipe tip: Vacuum-seal along with some butter, salt and a little sugar.
Green asparagus, whole, 600 g	Perforated steaming tray	85	100%	15-20	Recipe tip: Blanch before vacuum-sealing to retain the colour. Vacuum-seal along with some butter, salt and pepper.
Carrots, in 0.5 cm slices, 600 g	Perforated steaming tray	95	100%	35-40	Recipe tip: Vacuum-seal along with some orange juice, curry powder/paste and butter.
Potatoes, peeled, in 2 x 2 cm cubes, 800 g	Perforated steaming tray	95	100%	40	Recipe tip: Vacuum-seal along with some butter and salt. Can easily be used for making dishes such as salad.
Potatoes, skin on, whole or halved, 800 g	Perforated steaming tray	95	100%	50	Recipe tip: Vacuum-seal along with some butter and salt. Wash thoroughly beforehand.
Cherry tomatoes, whole or halved, 500 g	Perforated steaming tray	85	100%	15	Recipe tip: Vacuum-seal along with some olive oil, salt and sugar. Mix red and yellow cherry tomatoes together.
Squash, in 2 x 2 cm cubes, 600 g	Perforated steaming tray	90	100%	20-25	The cooking time may vary depending on the type of squash.
Courgettes, in 1 cm slices, 600 g	Perforated steaming tray	85	100%	30	Recipe tip: Vacuum-seal along with some olive oil, salt and thyme.
Mangetouts, whole, 500 g	Perforated steaming tray	85	100%	5-10	Recipe tip: Vacuum-seal along with some butter and salt.

Sous-vide – dessert

Food	Accessory/cookware	Temperature in °C	Heating function	Cooking time in min.	Comments
Pineapple, in 1.5 cm slices, 400 g	Perforated steaming tray	85	100%	70	Recipe tip: Vacuum-seal along with some butter, honey and vanilla
Apples, peeled, in 0.5 cm slices, 2-4 pcs	Perforated steaming tray	85	100%	10-15	Recipe tip: Vacuum-seal along with some caramel sauce.
Bananas, whole, 2-4 pcs	Perforated steaming tray	65	100%	15-20	Recipe tip: Vacuum-seal along with some butter, honey and a vanilla pod.
Pear, peeled, sliced, 2-4 pcs	Perforated steaming tray	85	100%	30	Recipe tip: Add honey or sugar to sweeten.
Kumquats, halved, 12-16 pcs	Perforated steaming tray	85	100%	75	Recipe tip: Vacuum-seal along with some butter, a vanilla pod, honey and apricot jam. Rinse under warm water, cut in half and deseed.
Vanilla sauce, 0.5 l	Perforated steaming tray	82	100%	18-20	Recipe tip: 0.5 l milk, 1 egg, 3 egg yolks, 80 g sugar, 1 vanilla pod.

19.9 Grilling

Note the recommended settings for grilling.
A total of three grilling functions mean that you can brown or grill (full surface grill and air recirculation) your food to your requirements – or do both at the same time in a single step (full surface grill level 1 + humidity and full surface grill, setting 2 + humidity).

- | Browning with full surface grill + air recirculation at a temperature of 230 °C: Also known as cooking au gratin. The last step in a cooking process. A brown crust forms on the surface of the food. Only takes a few minutes. The ingredients are already pre-cooked.
- | Grilling with full surface grill + air recirculation at a temperature of 180-200 °C: Complete cooking process whereby the surface is toasted. The cooking process is longer than when cooking au gratin. The ingredients must not be pre-cooked.
- - | Browning + grilling with full surface grill level 1 + humidity and full surface grill level 2 + humidity: With these two functions, food is simultaneously cooked and browned as the two steps are carried out simultaneously with one type of heating. The steam cooks the food, e.g. a potato gratin, and the second step browns it.
- Do not grill food with the oven door open.
- With the full surface grill and air recirculation function, a pre-heating time of 5 minutes is sufficient. You do not need to wait until the appliance reaches the temperature. With the full surface grill and air recirculation function, the selected temperature may differ from the actual temperature in the appliance. Grilling is a rapid cooking process at high temperatures. Consequently, for browning and roasting, a higher temperature than is actually needed on the surface of the food is selected.
- If you use the core temperature probe with the full surface grill with air recirculation or humidity with full surface grill functions, make sure that the core temperature probe is at least 5 cm away from the grill. Otherwise, the heat of the grill heating element may damage the core temperature probe.

Grilling

Food	Accessory/cookware	Shelf position	Temperature in °C	Type of heating	Humidity in %	Cooking time in min.	Comments
Meringue topping, on a cake or dessert	Wire rack	2	230			3-8	
Toast with topping	Wire rack or Unperforated steam container	2	200			12-15	

Food	Accessory/cookware	Shelf position	Temperature in °C	Type of heating	Humidity in %	Cooking time in min.	Comments
Trout, whole	Wire rack or Unperforated steam container	2	230			12-15 on each side	Recipe tip: Stuff with sliced lemon and parsley.
Grilled aubergine, sliced	Unperforated steam container	2	200			20	
Grilled vegetables, 700 g	Unperforated steam container	2	230			20-25	E.g. courgettes
Vegetable bake	Unperforated steam container	2	190			30-35	E.g. with broccoli and cauliflower
Vegetable skewers	Unperforated steam container or Wire rack	2	230			15 on each side	The cooking time depends on the types of vegetable.
Chicken thighs, 350 g each	Wire rack or Unperforated steam container	2	180-200			35-40	
Hamburgers, 125 g, in accordance with EN 60350-1	Wire rack or Unperforated steam container	2	230			12-15 on each side	Preheat the appliance for 5 minutes.
Potato gratin, 1 kg potatoes	Wire rack or Unperforated steam container	2	180			35-40	
Lasagne	Wire rack	2	180			40-45	
Sweet potatoes, sliced	Unperforated steam container	2	200			15	
Toast in accordance with EN 60350-1	Wire rack	1	230			5-7	Preheat the appliance for 5 minutes.
Grilled courgettes, stuffed, halved lengthways	Unperforated steam container	2	180			30-40	

19.10 Side dishes

Take note of the recommended settings for side dishes.
Also follow the instructions on the packaging.

Side dishes

Food	Accessory/cookware	Temperature in °C	Type of heating	Humidity in %	Cooking time in min.	Comments
Basmati rice, 250 g + 500 ml water	Unperforated steam container	100	100%	100	20-25	
Bulgur wheat, 250 g + 250 ml water	Unperforated steam container	100	100%	100	10-15	
Couscous, 250 g + 250 ml water	Unperforated steam container	100	100%	100	10-15	

Food	Accessory/cookware	Temperature in °C	Type of heating	Humidity in %	Cooking time in min.	Comments
Dumplings, 90 g each	Perforated steaming tray or Unperforated steam container	95-100	100%	100	25-30	
Long-grain rice, 250 g + 500 ml water	Unperforated steam container	100	100%	100	25-30	
Brown rice, 250 g,+ 375 ml water	Unperforated steam container	100	100%	100	30-35	
Polenta, 250 g + 625 ml water for hard polenta, 250 g + 1125 ml water for soft polenta	Unperforated steam container	100	100%	100	10-15	
Quinoa, 250 g + 500 ml water	Unperforated steam container	100	100%	100	30-40	
Risotto, 250 g + 750 ml stock	Unperforated steam container	100	100%	100	35-40	
Red beans	Unperforated steam container	100	100%	100	85-95	Soak for 1 hour. Cover with water.
Red lentils, 250 g + 375 ml water	Unperforated steam container	100	100%	100	15-20	
Lentils, 250 g + 375 ml water	Unperforated steam container	100	100%	100	50-60	
White beans, presoaked, 250 g + 1 l water	Unperforated steam container	100	100%	100	55-65	

19.11 Desserts

Note the recommended settings for desserts.

Desserts

Food	Accessory/cookware	Temperature in °C	Type of heating	Humidity in %	Cooking time in min.	Comments
Crème brûlée, 130 g each	Perforated steaming tray	90	80%	80	55-65	
Steamed dumplings or yeast dumplings, 100 g each	Unperforated steam container	100	100%	100	20-30	Allow steamed dumplings to rise for 30 minutes before steaming. → *"Dough proving – leaving to rise", Page 53*
Flan or crème caramel, 130 g each	Perforated steaming tray	90	100%	100	35-40	
Compote	Unperforated steam container	100	100%	100	20-25	E.g. apples, pears, rhubarb Recipe tip: Add sugar, vanilla sugar, cinnamon or lemon juice.

Food	Accessory/cookware	Temperature in °C	Type of heating	Humidity in %	Cooking time in min.	Comments
Rice pudding, 200 g rice + 800 ml milk	Unperforated steam container	100	100%	100	55-60	Allow to cool down for 10 minutes and stir. Recipe tip: Add fruit, sugar or cinnamon.
Orange flan	Perforated steaming tray	90	100%	100	40-45	
Poached pears	Perforated steaming tray	100	100%	100	45-50	
Sweet bake	Unperforated steam container	180-200	0% or 60%	0 or 60	20-40	Preheat. E.g. semolina, quark or pre-cooked rice pudding
Sweet soufflé	Unperforated steam container	160	0%	0	30	With fruit, chocolate, vanilla

19.12 Other

Note the recommended settings.

Other

Food	Accessory/cookware	Temperature in °C	Type of heating	Humidity in %	Cooking time in min.	Comments
Sterilising, e.g. baby bottles, jam jars	Wire rack	100	100%	100	20-25	
Drying fruit or vegetables	Perforated steaming tray	80-100	0%	0	180-300	E.g. thinly sliced tomatoes, mushrooms, courgettes, apples, pears, etc.
Eggs, hard-boiled	Perforated steaming tray	100	100%	100	13-15	Preheat.
Eggs, medium	Perforated steaming tray	100	100%	100	7	Preheat.
Eggs, soft-boiled	Perforated steaming tray	100	100%	100	4	Preheat.
Royale, 500 g	Glass dish	90	100%	100	25-30	
Semolina dumplings	Unperforated steam container	90-95	0%	0	12-15	
Hot towels	Unperforated steam container	100	100%	100	10-15	Moisten the towels.
Potato gratin, 1 kg potatoes	Ovenproof dish	180	30%	30	45-65	
Lasagne	Unperforated steam container	170-190	30% or 60%	30 or 60	40-55	
Soufflé, cheese soufflé	Soufflé dishes	160	0%	0	30	
Melting chocolate	Heat-resistant cookware	60	100%	100	15-20	Cover with heat-resistant cling film.
Melting butter	Heat-resistant cookware	90	30%	30	15-25	

19.13 Baked items

Note the recommended settings for baked items.

- With the combi-steam oven, you can always prepare your baked goods with the optimal humidity:
  - 0% | Hot air + 0% humidity: When baking fruit flan and quiche, excess humidity can escape. This operating mode corresponds to the hot air in the conventional baking oven.
  - 30% | Hot air + 30% humidity: Sponge cakes do not dry out. The humidity in the food cannot escape from the cooking compartment.
  - 60%–100% | Hot air + 60 - 100% humidity: Puff pastry and yeast-risen pastry are fluffy inside and crispy outside, with a gloss.
- If you only bake on one level, use level 2. If you bake on two levels at the same time, use levels 1 and 3. Slide the unperforated cooking insert into the second level. If you are using a deep baking tin, place it on the wire rack that you insert into the first level.
- When misting, the appliance leads moisture to the food. Misting is possible in hot air mode (0% humidity) and a humidity level of 30%. Use this function, for example, at the beginning of the baking process when baking bread or leavened cakes. This function guarantees more volume and a crispier and shinier crust.

Baked items

Food	Accessory/cookware	Shelf position	Temperature in °C	Type of heating	Humidity in %	Cooking time in min.	Comments
Apple cake, in accordance with EN 60350-1	Springform cake tin, diameter 20 cm	2	160	0%	0	110	
Bagels	Unperforated steam container	2	190-210	80% or 100%	80 or 100	20-25	
Baguette, prebaked	Wire rack	2	190-210	0%, 30%, 60% or 80%	0, 30, 60 or 80	10-15	
Sponge base, thick, 6 eggs	Springform tin	2	150	0%	0	45	
Sponge base, thin, 2 eggs	Unperforated steam container	2	200	100%	100	8-10	E.g. for Swiss roll
Puff pastry goods	Unperforated steam container	2	190-210	80% or 100%	80 or 100	10-18	E.g. with poppy seeds, marzipan, or savoury with ham, cheese
Brioche, bread rolls	Unperforated steam container	2	160	0%	0	8-12	
Bread rolls, 50-100 g each	1. Unperforated steam container 2. Unperforated steam container	2	1. 150 2. 170-230	1. 100% 2. 30%	1. 100 2. 30	1. 10 2. 25	Step 2. 170 °C for light or 230 °C for dark
Bread rolls, prebaked	Wire rack	2	150-170	0%	0	8-10	Inject steam at the beginning.
Bread, 0.5–1 kg	1. Unperforated steam container 2. Unperforated steam container	2	1. 150 2. 170-230	1. 100% 2. 30%	1. 100 2. 30	1. 10 2. 25-45	Step 2. 170 °C for light or 230 °C for dark. Use the core temperature probe → *Page 20* to monitor the exact cooking temperature. Place on the wire rack to cool.
Sponge traybakes	Unperforated steam container	2	160-165	0%	0	35-40	
Bundt cake, 1 kg flour	Bundt cake tin	2	160-175	30%	30	45-50	

Food	Accessory/cookware	Shelf position	Temperature in °C	Type of heating	Humidity in %	Cooking time in min.	Comments
Yeast tray bakes	Unperforated steam container	2	160-170	0%, 30% or 60%	0, 30 or 60	30-45	For yeast tray bakes with moist toppings (e.g. plum tart or onion tart), use 0% humidity, and for yeast tray bakes with dry toppings (e.g. crumble), use 60% humidity.
Plaited loaf, 500 g flour	Unperforated steam container	2	160-170	30%	30	25-35	Inject steam at the beginning
Muffins	Muffin tray	2	170	30%	30	20-30	
Macaroons	Unperforated steam container	2	150-160	0%	0	15-20	
Biscuits	Unperforated steam container	2	150-165	0%	0	10-20	
Quiche, flan	Quiche dish	2	1. 230 2. 180	1. 30% 2. 30%	1. 30 2. 30	1. 5 2. 30	
Sponge cake	Loaf tin or Springform tin	2	165-170	0% or 30%	0 or 30	50-75	
Small cakes, in accordance with EN 60350-1	Unperforated steam container	2	160	0%	0	25-30	
Small cakes, in accordance with EN 60350-1	Perforated steaming tray	1+3	150	0%	0	30-35	Use level 1 and level 3.
Viennese whirls, in accordance with EN 60350-1	Unperforated steam container	2	140	0%	0	50	
Viennese whirls, in accordance with EN 60350-1	Perforated steaming tray	1+3	140	0%	0	50	Use level 1 and level 3.
Tart	Tart dish or tin	2	190-200	0% or 30%	0 or 30	30-45	E.g. with apples, chocolate, apricots, or savoury with asparagus, onions, cheese
Wholemeal bread	Loaf tin	2	1. 230 2. 200	1. 0% 2. 0%	1. 0 2. 0	1. 10 2. 20	Inject steam at the beginning.
Hot water sponge cake, in accordance with EN 60350-1	Unperforated steam container	2	150	0%	0	40	
Cream puffs, eclairs	Unperforated steam container	2	180-190	0% or 30%	0 or 30	40-45	

19.14 Dough proving – leaving to rise

Your appliance provides the ideal conditions for proving dough and dough mixtures or raw pastries without them drying out.

- To do this, use the "Dough proving" operating mode .
- You do not have to cover the bowl with a damp cloth. Proving only takes half as long as it usually does.
- The cooking time specified is intended as a guide only. Leave the dough to rise until it has doubled its volume.

Dough proving

Food	Accessory/cookware	Temperature in °C	Type of heating	Humidity in %	Cooking time in min.	Comments
Dough mixture, pizza	Bowl	38		-	25	E.g. yeast dough, natural fermentation starter, sourdough
Dough mixture, bread	Bowl	45		-	40	E.g. yeast dough, natural fermentation starter, sourdough
Dough mixture, brioche	Bowl	45		-	55	E.g. yeast dough, natural fermentation starter, sourdough

19.15 Reheating – warming

You can use steam assistance to gently warm up food. The food tastes and looks as though it has been freshly cooked. You can even warm and crisp up baked goods from the day before.

- In the combi-steam oven, you can create the perfect conditions for warming cooked food without drying it out. This retains the flavour and quality; the food tastes as though it has been freshly prepared.
- To do this, use the "Reheat" mode .
- Do not cover the food. Do not use any aluminium foil or cling film.
- The figures listed are for portions for one person. Larger quantities of food can also be warmed up in the unperforated cooking insert. This increases the specified cooking times.

Reheating

Food	Accessory/cookware	Temperature in °C	Type of heating	Humidity in %	Cooking time in min.	Comments
Baguette, bread rolls, frozen	Wire rack	140		-	10-15	
Baguette, bread rolls, from previous day	Wire rack	180		-	4-7	
Roasts, sliced, 150 g each	Unperforated steam container	120		-	15-20	Finger-thick slices; do not pile them on top of one another; add sauce to the cooking container to make the roast more succulent.
Vegetables	Plates	120		-	10-12	
Pizza, from the previous day, not deep-frozen	Wire rack	180		-	8-10	
Starchy side dishes	Plates	120		-	8-12	E.g. pasta, quartered potatoes, rice; baked or fried food such as chips or croquettes are not suitable
Plated meals	Plates	120		-	15-20	

19.16 Defrosting

In your appliance, you can defrost frozen food gently and faster than in the refrigerator and more evenly than in the microwave.

⚠ **WARNING – Risk of serious harm to health!**

There is a risk of salmonella from meat and poultry. Meat and poultry may transmit germs.

- ▸ When defrosting food from animal sources, you must remove the liquid that escapes during defrosting. Ensure that the liquid that escapes during defrosting never comes into contact with other foods.
- ▸ Slide the unperforated cooking insert under the food. Pour away the liquid that collects in the dish or tray as the meat and poultry defrosts. Then clean the sink and rinse it with plenty of water. Clean the cooking insert in hot soapy water or in the dishwasher.
- ▸ After defrosting, operate the combi-steam oven for 15 minutes using hot air at 180 °C.

- To do this, use the "Defrost" operating mode.
- With this operating mode, no preheating is necessary.
- The defrosting times specified are intended as a guide only. The defrosting time depends on the size, weight and shape of the frozen food. To reduce the defrosting time, freeze your food flat and in individual pieces.
- Remove the food from the packaging before defrosting.
- Do not defrost more food than you intend to eat on this occasion.
- Remember: Food that has been defrosted may not keep for as long as fresh food and it will spoil more quickly. Prepare defrosted food immediately and cook it thoroughly.
- After half of the defrosting time, turn fish or meat and separate pieces of frozen food, such as berries or pieces of meat. Fish does not need to be fully defrosted. When the surface is soft enough to absorb the spices, the fish is sufficiently defrosted.

Defrosting

Food	Accessory/cookware	Temperature in °C	Type of heating	Humidity in %	Cooking time in min.	Comments
Berries, 300 g	Perforated steaming tray	45-50		-	6-8	
Roasts, 1-1.5 kg	Perforated steaming tray	45-50		-	90-120	
Fish fillet, 150 g each	Perforated steaming tray	45-50		-	15-20	
Vegetables, 400 g	Perforated steaming tray	45-50		-	10-12	
Goulash, 600 g	Perforated steaming tray	45-50		-	40-55	
Chicken, 1 kg	Perforated steaming tray	45-50		-	60-70	
Chicken thighs, 400 g each	Perforated steaming tray	45-50		-	40-50	

19.17 Preserving food

Preserve fruit and vegetables in jars.

- You can easily preserve fruit and vegetables in your appliance.
- Cook food as soon as possible after purchase or after it has been harvested. Prolonged storage reduces the vitamin content and means that food is on the verge of fermenting.
- Only use fruit and vegetables that are in good condition.
- The appliance is not suitable for preserving meat.
- Carefully check and clean the preserving jars, rubber sealing rings, clips and springs.
- Sterilise the washed jars in your combi-steam oven for 20 to 25 minutes at 100 °C and 100% humidity before preserving.
- Place the sealed preserving jars in the perforated cooking container. They must not be in contact with each other.
- Once the cooking time has elapsed, open the oven door. Do not remove the preserving jars from the cooking compartment until they have completely cooled down.

Preserving food

Food	Accessory/cookware	Temperature in °C	Type of heating	Humidity in %	Cooking time in min.	Comments
Fruit, vegetables, in sealed 0.75 l preserving jars	Perforated steaming tray	100	100%	100	35-40	
Beans, peas, in sealed 0.75 l preserving jars	Perforated steaming tray	100	100%	100	120	

19.18 Juicing – berries

Your appliance lets you extract juice from berries effortlessly and cleanly.

- Place the berries into the perforated cooking insert and slide it into the 2nd level from the bottom. Slide the unperforated cooking insert one level underneath to catch any liquid that drips down.
- Leave the berries in the appliance until all of the juice has been extracted.
- You can then place the berries in a tea towel and squeeze to extract the remaining juice.

Juicing (berries)

Food	Accessory/cookware	Temperature in °C	Type of heating	Humidity in %	Cooking time in min.	Comments
Berries	Perforated steaming tray or Unperforated steam container	100	100%	100	60-120	

19.19 Preparing yoghurt

Use your appliance to make yoghurt.

- You can prepare yogurt using your appliance.
- Heat pasteurised milk to 90 °C on the hob to prevent the yoghurt cultures from being overcome by any unwanted microbes. You must not heat ultra-high temperature processed milk (UHT milk). If you use cold milk to make yoghurt, the incubation time will be longer.
- Allow the milk in the water bath to cool to 40 °C so that the yoghurt cultures are not destroyed.
- Stir some natural yoghurt with identified yoghurt cultures into the milk. Use one to two teaspoons of yoghurt per 100 ml milk.
- When using yoghurt ferment, follow the instructions on the packet.
- Pour the yoghurt into washed jars.
- You can sterilise the washed jars in your appliance at 100 °C and 100% humidity for 20 to 25 minutes. Leave the jars and the cooking compartment to cool down before you pour the yoghurt into the disinfected jars, and place the jars in the appliance.
- Once you have finished making the yoghurt, place it in the refrigerator.
- To make thick yoghurt, add skimmed milk powder to the milk before heating it. Use one to two tablespoons of skimmed milk powder per litre of milk.

Preparing yoghurt

Food	Accessory/cookware	Temperature in °C	Type of heating	Humidity in %	Cooking time in min.	Comments
Yoghurt starter, in sealed jars	Perforated steaming tray	45	100%	100	300	Recipe tip: Flavour the yoghurt starter with fruit purée, marmalade, honey, vanilla or chocolate, and then increase the preparation time if necessary.

19.20 Preparing bulky food

Recommendation for preparing bulky food.
- To prepare bulky food items, you can remove the side slide-in rack.
- To do this, undo the knurled nuts at the front of the slide-in racks, and pull the slide-in racks out towards the front.
- Place the rack directly onto the bottom of the cooking compartment and place the food or roasting dish onto the rack. Do not place the food or roasting dish directly onto the bottom of the cooking compartment.

19.21 Tips for keeping acrylamide levels to a minimum when cooking

Acrylamide is harmful to your health and is produced when you cook cereal and potato products at very high temperatures.

General information
- Keep cooking times as short as possible.
- Cook food until it is golden brown, but not too dark.
- Use large, thick pieces of food. Cooking produces less acrylamide.

Baked goods
- Set the temperature for hot air to max. 180 °C.

Biscuits
- Brush biscuits with egg or egg yolk. This reduces the production of acrylamide.
- Spread out a single layer evenly on the baking tray.

Oven chips
- Spread the chips out evenly and in a single layer on the baking tray.
- Cook at least 400 g at once on a baking tray so that the chips do not dry out.

20 Customer Service

If you have any queries on use, are unable to rectify faults on the appliance yourself or if your appliance needs to be repaired, contact Customer Service. Function-relevant genuine spare parts according to the corresponding Ecodesign Order can be obtained from Customer Service for a period of at least 10 years from the date on which your appliance was placed on the market within the European Economic Area.

Note: Under the terms of the manufacturer's warranty the use of Customer Service is free of charge.

Detailed information on the warranty period and terms of warranty in your country is available from our after-sales service, your retailer or on our website.
If you contact Customer Service, you will require the product number (E-Nr.) and the production number (FD) of your appliance.
The contact details for Customer Service can be found in the enclosed Customer Service directory or on our website.

This product contains light sources from energy efficiency class G. These light sources are available as a spare part and should only be replaced by trained specialist staff.

20.1 Product number (E-Nr.) and production number (FD)

You can find the product number (E-Nr.) and the production number (FD) on the appliance's rating plate. You will see the rating plate with these numbers if you open the appliance door.



Make a note of your appliance's details and the Customer Service telephone number to find them again quickly.

21 Declaration of Conformity

Gaggenau Hausgeräte GmbH hereby declares that the appliance with Home Connect functionality conforms to the basic requirements and other relevant provisions of Directive 2014/53/EU.
A detailed RED Declaration of Conformity can be found online at www.gaggenau.com among the additional documents on the product page for your appliance.

CE

Hereby, Gaggenau Hausgeräte GmbH declares that the appliance with Home Connect functionality is in compliance with relevant statutory requirements.[1]
A detailed Declaration of Conformity can be found online at www.gaggenau.com/gb among the additional documents on the product page for your appliance.[1]

UK CA

Only applies to Great Britain
2.4 GHz band (2400–2483.5 MHz): Max. 100 mW

[1] Only applies to Great Britain

5 GHz band (5150–5350 MHz + 5470–5725 MHz):
Max. 100 mW

	BE	BG	CZ	DK	DE	EE	IE	EL	ES
	FR	HR	IT	CY	LI	LV	LT	LU	HU
	MT	NL	AT	PL	PT	RO	SI	SK	FI
	SE	NO	CH	TR	IS	UK (NI)			
5 GHz WLAN (Wi-Fi): For indoor use only.									

AL	BA	MD	ME	MK	RS	UK	UA
5 GHz WLAN (Wi-Fi): For indoor use only.							

22 Installation instructions

Observe this information when installing the appliance.



22.1 General installation instructions

Follow these instructions before you start installing the appliance.

⚠ WARNING – Risk of injury!

The appliance is heavy.

- ▸ To move the appliance, two people are required.
- ▸ Use only suitable tools and equipment.

Sharp-edged parts may be accessible during installation.

- ▸ Wear protective gloves.

- The safe operation of this appliance can only be guaranteed if it has been installed to a professional standard in accordance with these installation instructions. The installer shall be liable for damages incurred as a result of incorrect installation.
- Switch off the power supply before carrying out any work.
- Check the appliance for damage after unpacking it. Do not connect the appliance if it has been damaged in transit.
- Do not use the door handle for transport or installation.
- When installing, observe the current, valid building regulations as well as the regional power company's regulations.
- Install the appliance in accordance with the installation diagram. Observe the minimum clearances.
- Installation behind cabinet doors: Suitable measures should be taken to ensure these types of doors cannot close during operation. There is a risk of overheating if the door does not remain open during operation or during cooling (fan operation).
- Before starting up the appliance, remove any packaging material and adhesive film from the cooking compartment and the door.
- The dimensions in the figures are in mm.

22.2 Planning notes

Observe the following planning notes before installing the appliance.

- The door direction cannot be reversed.
- The distance from the cabinet cavity to the door panel surface is 47 mm.
- Note the front projection for opening drawers next to the appliance.
- When planning a corner solution, consider a door opening angle of at least 90°.
- Do not install any other electrical appliance in the cupboard above this appliance.
- Where the control panel is located on the bottom of the appliance, do not install this appliance version above a dishwasher. Steam that rises from the dishwasher may damage the appliance's electronics.

22.3 Appliance dimensions

You will find the dimensions of the appliance here

BS450/BS451

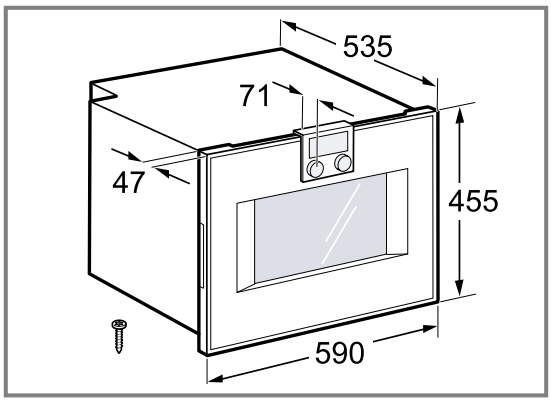

BS454/BS455

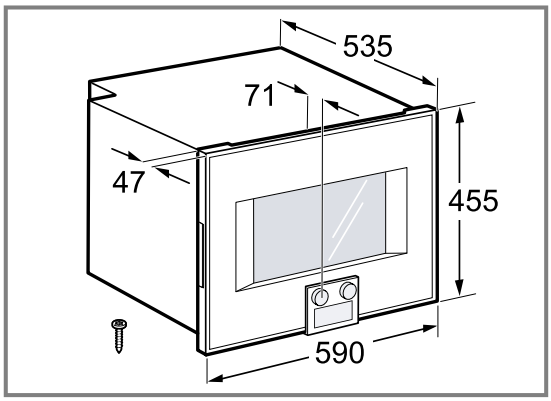

22.4 Preparing the units

Requirement: Fitted units must be heat-resistant up to 90 °C, and adjacent unit fronts up to 70 °C.

1. Ensure that the mains socket is located outside of the built-in niche.
2. Carry out cut-out work on the units and then insert the appliance.
3. After making the cut-outs, remove any shavings. Shavings may impair the function of electrical components.
4. Secure any unsecured units to the wall using a standard bracket.
5. Only install the appliance high enough that the customer can remove the accessory effortlessly.

22.5 Electrical connection

In order to safely connect the appliance to the electrical system, follow these instructions.

- The appliance corresponds to protection class I and must only be operated with a protective earth connection.
- The fuse protection must correspond to the power rating specified on the appliance's rating plate and to the local regulations.
- The appliance must be disconnected from the power supply whenever installation work is being carried out.
- The appliance must only be connected using the power cable provided. Plug the power cable fully into the back of the appliance.
- The power cable must only be replaced with a cable from the original manufacturer. The power cable can be obtained from customer service.
- Contact protection must be guaranteed by the installation.

Power cable with a plug with earthing contact

For an appliance with a plug with earthing contact, follow these instructions.

- Connect the appliance only to a correctly installed, earthed socket.
- If the plug with earthing contact can no longer be accessed after installation, an energy-isolating device in the phases must be provided in the permanent electrical installation in accordance with the installation regulations.

22.6 LAN connection to the home network

This appliance can be networked. You can connect the appliance to the home network using a LAN cable. The scope of delivery does not include a LAN cable.

Establishing the LAN connection

1. Before installing the appliance, insert a LAN cable into the socket on the back of the appliance.
2. Use the strain relief to secure the LAN cable in place.

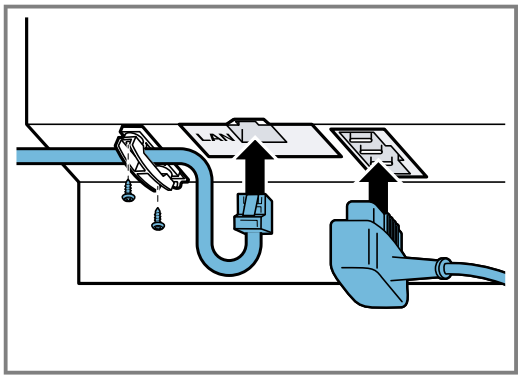

3. Connect the LAN cable to a network connection.

22.7 Installing the appliance in a tall unit

1. Observe the clearances when installing in a tall unit.

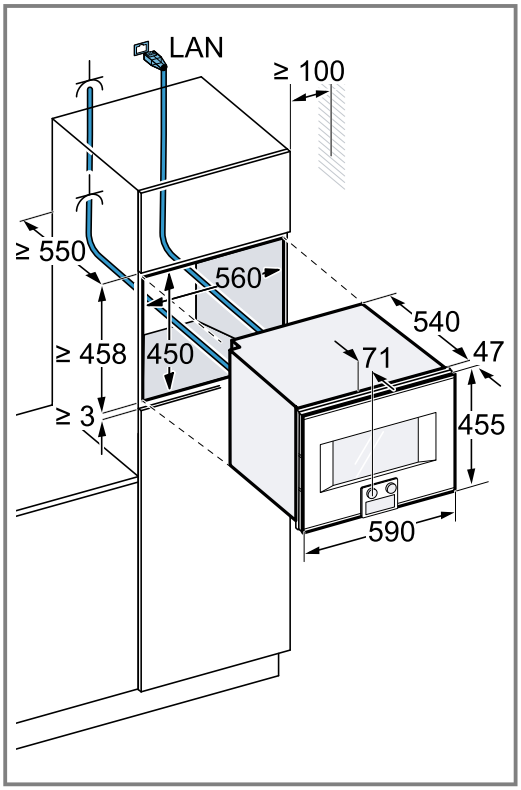

When installing 2 appliances next to each other, align both handles to the centre.

2. When installing 2 appliances on top of each other, observe the clearances.

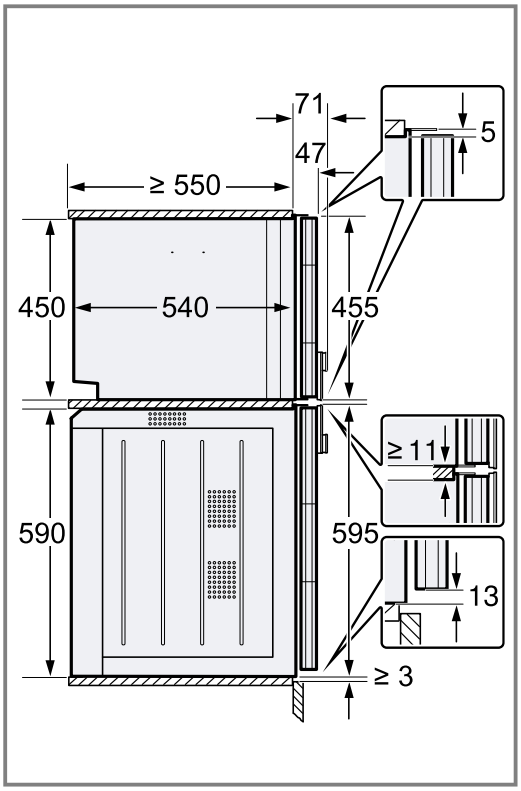

3. If there is no intermediate floor above the appliance, secure the appliance against tipping in the unit. Secure 2 commercially available brackets on both sides in the unit at a depth of 450 mm, 5 mm above the height of the appliance.

4. Push the appliance all the way into the built-in unit.
   – Do not kink or trap the connection cable.

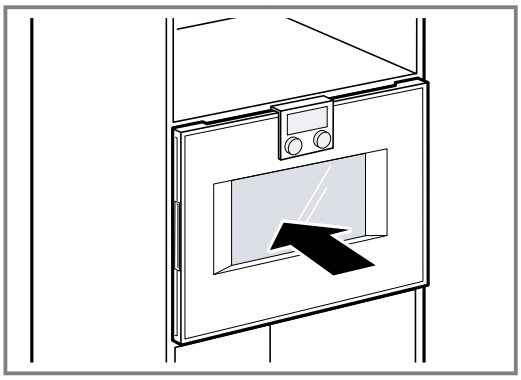

5. Centre the appliance.
   There must be an air gap of at least 5 mm between the appliance and the adjacent unit fronts.
6. Use a spirit level to adjust the appliance so that it is perfectly level.

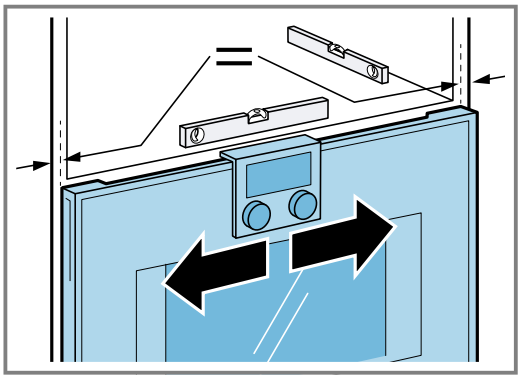

7. Open the appliance door.
8. Secure the appliance with the enclosed screw.

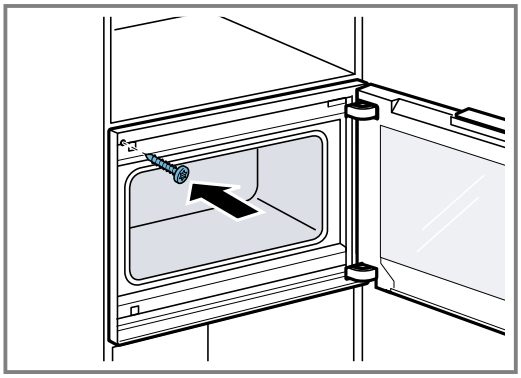

9. Remove the red plastic transport lock from the upper door catch.

22.8 Aligning the appliance door

The device door is already aligned when the appliance is delivered. Alignment is not normally required.
If required, you can adjust the appliance door's alignment at the hinge in order to achieve a precise gap.
You cannot adjust the appliance door's height.

Aligning the appliance door

1. Pull the appliance out slightly from its built-in recess.
   An oval opening is located on the top of the appliance on the hinged side.

2. Remove the cover cap.

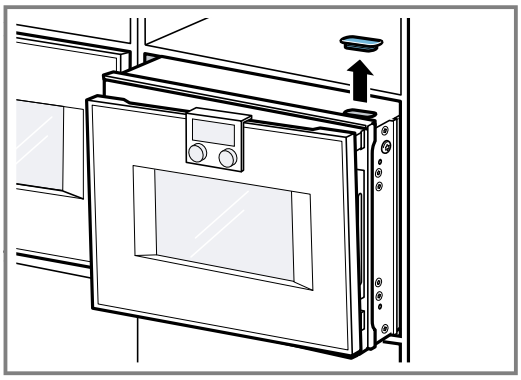

3. Undo the two screws a little, but do not completely remove them.

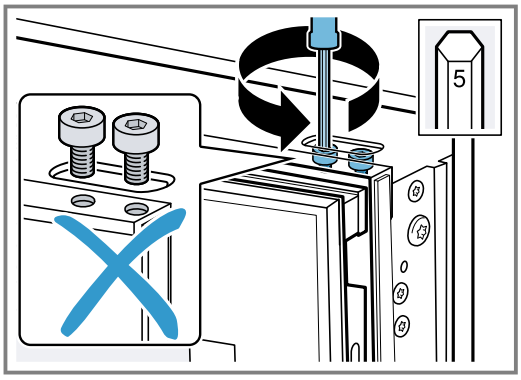

4. Adjust the appliance door using the side screw; to do this, open the appliance door and then close it again if necessary.

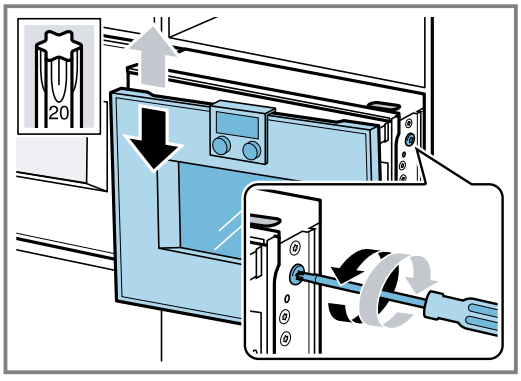

5. Check the alignment.

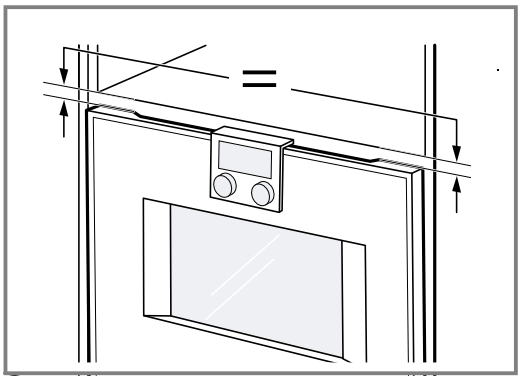

6. Tighten both screws.

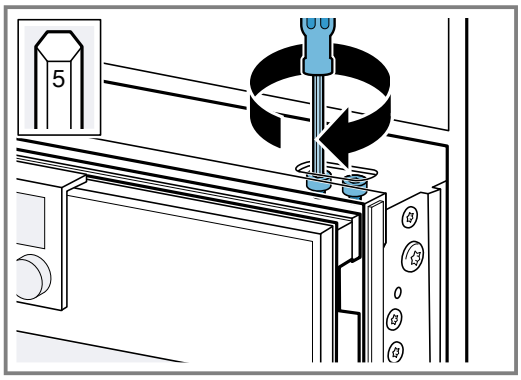

7. Fit the cover cap.

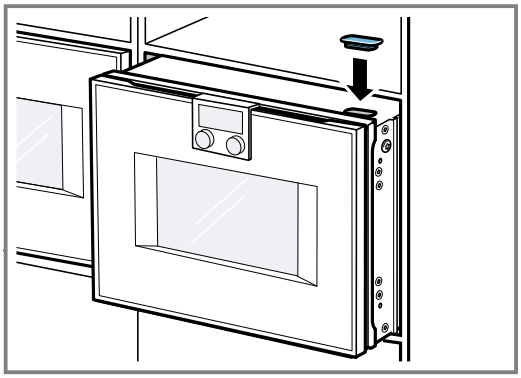

8. Slide the appliance into the built-in recess.

22.9 Combining the appliance with an oven

1. Only combine suitable appliances of the same brand and series.
2. Fit the combi-steam oven first, then the oven.

22.10 Combining the appliance with a warming drawer

ATTENTION!
Sharp edges on the appliance may damage the panel of the warming drawer.
- Do not damage the warming drawer cover when sliding the appliance in.

1. Only combine suitable appliances of the same brand and series.
2. Install the warming drawer first.
3. Follow the installation instructions for the warming drawer.
4. Slide the appliance, on the warming drawer, into the built-in cabinet.

22.11 Removing the appliance

1. Disconnect the appliance from the power supply
2. Undo the fastening screws.
3. Lift the appliance slightly and pull it out completely.

BSH Hausgeräte GmbH
Carl-Wery-Straße 34
81739 München, GERMANY
www.gaggenau.com

Valid within Great Britain:
Imported to Great Britain by
BSH Home Appliances Ltd.
Grand Union House
Old Wolverton Road
Wolverton, Milton Keynes
MK12 5PT
United Kingdom

GAGGENAU

9001698608 en (020214)