Gaggenau
Information for Use

RY295350

Fridge-freezer

Futher information and explanations are available online:

Table of contents

1 Safety 4
1.1 General information 4
1.2 Intended use 4
1.3 Restriction on user group 4
1.4 Safe transport 4
1.5 Safe installation 5
1.6 Safe use 6
1.7 Damaged appliance 8

2 Preventing material damage 10

3 Environmental protection and saving energy 10
3.1 Disposing of packaging 10
3.2 Saving energy 10

4 Installation and connection 11
4.1 Scope of delivery 11
4.2 Criteria for the installation location 11
4.3 Installing the appliance 12
4.4 Preparing the appliance for the first time 12
4.5 Connecting the appliance to the drinking water connection 12
4.6 Connecting the appliance to the electricity supply 12

5 Familiarising yourself with your appliance 13
5.1 Appliance 13
5.2 Control panel 14
5.3 Control panel (submenu) 15
5.4 Control panel (cool-fresh compartment) 16

6 Features 16
6.1 Shelf 16
6.2 Fixed shelf 17
6.3 Pull-out container 17
6.4 Cool-fresh container 17
6.5 Container divider 17
6.6 Flat frozen food container 18
6.7 Frozen food pull-out container 18
6.8 Suspended frozen food container 18
6.9 Door rack 18
6.10 Ice cube container 18
6.11 Accessories 18

7 Basic operation 18
7.1 Switching on the appliance 18
7.2 Operating tips 18
7.3 Switching off the appliance 19
7.4 Setting the temperature unit 19
7.5 Setting the temperature 19
7.6 Cool-fresh compartment storage setting 19

8 Additional functions 19
8.1 Fast cooling 19
8.2 Fast freezing 20
8.3 Holiday mode 20
8.4 Energy-saving mode 20
8.5 Freshness mode 21
8.6 Interior lighting 21
8.7 Rest mode 21
8.8 Filter change notification 21
8.9 Filter change status 22

9 Alarm 22
9.1 Door alarm 22
9.2 Temperature alarm 22

10 Home Connect 23
10.1 Setting up Home Connect..... 23
10.2 Checking the signal strength 24
10.3 Installing updates for the Home Connect software..... 24
10.4 Resetting Home Connect settings 24
10.5 Remote diagnostics 25
10.6 Data protection..... 25

11 Refrigerator compartment..... 25
11.1 Tips for storing food in the refrigerator compartment 26
11.2 Chill zones in the refrigerator compartment..... 26

12 Cool-fresh compartment..... 26
12.1 Storage recommendations for the cool-fresh compartment..... 26
12.2 Storage times in the cool-fresh compartment at 0 °C (32 °F)..... 27

13 Freezer compartment..... 27
13.1 Freezing capacity 27
13.2 Fully utilising the freezer compartment volume 27
13.3 Tips for storing food in the freezer compartment..... 27
13.4 Tips for freezing fresh food 28
13.5 Shelf life of frozen food at −18 °C (0 °F)..... 28
13.6 Defrosting methods for frozen food 28

14 Water system..... 28
14.1 Water filter 28
14.2 Water dispenser 29
14.3 Ice cube maker 30

15 Defrosting..... 31
15.1 Defrosting in the refrigerator compartment..... 31
15.2 Defrosting in the cool-fresh compartment 31
15.3 Defrosting in the freezer compartment 31

16 Cleaning and servicing..... 31
16.1 Preparing the appliance for cleaning 31
16.2 Cleaning the appliance 32
16.3 Removing the fittings..... 32
16.4 Removing appliance components..... 34

17 Troubleshooting..... 37
17.1 Power failure..... 41
17.2 Conducting an appliance self-test 41

18 Storage and disposal..... 41
18.1 Taking the appliance out of operation 41
18.2 Disposing of old appliance 42

19 Customer Service..... 42
19.1 Product number (E-Nr.) and production number (FD)..... 42

20 Technical data..... 43

21 Declaration of Conformity 43

1 Safety

Observe the following safety instructions.

1.1 General information

- Read this instruction manual carefully.
- Keep the instruction manual and the product information safe for future reference or for the next owner.
- Do not connect the appliance if it has been damaged in transit.

1.2 Intended use

Only use this appliance:
- for chilling and freezing food, making ice and dispensing water.
- In private households and in enclosed spaces in a domestic environment.
- Up to an altitude of 2000 m above sea level.

1.3 Restriction on user group

This appliance may be used by children aged 8 or over and by people who have reduced physical, sensory or mental abilities or inadequate experience and/or knowledge, provided that they are supervised or have been instructed on how to use the appliance safely and have understood the resulting dangers.
Do not let children play with the appliance.
Cleaning and user maintenance must not be performed by children unless they are being supervised.
Children above the age of three years old and younger than eight years old may load and unload the the fridge-freezer.

1.4 Safe transport

⚠ WARNING – Risk of injury!
The high weight of the appliance may result in injury when lifted.
▸ Do not lift the appliance on your own.

1.5 Safe installation

⚠ WARNING – Risk of electric shock!

Incorrect installation is dangerous.

- ▸ Connect and operate the appliance only in accordance with the specifications on the rating plate.
- ▸ Connect the appliance to a power supply with alternating current only via a properly installed socket with earthing.
- ▸ The protective conductor system of the domestic electrical installation must be properly installed.
- ▸ Never equip the appliance with an external switching device, e.g. a timer or remote control.
- ▸ When the appliance is installed, the mains plug of the power cord must be freely accessible. If free access is not possible, an all-pole isolating switch must be installed in the permanent electrical installation according to the installation regulations.
- ▸ When installing the appliance, check that the power cable is not trapped or damaged.

If the insulation of the power cord is damaged, this is dangerous.

- ▸ Never let the power cord come into contact with heat sources.

⚠ WARNING – Risk of explosion!

If the appliance's ventilation openings are sealed, a leak in the refrigeration circuit may result in a flammable mixture of gas and air.

- ▸ Keep ventilation openings, in the appliance enclosure or in the built-in structure, clear of obstruction.

⚠ WARNING – Risk of fire!

It is dangerous to use an extended power cord and non-approved adapters.

- ▸ Do not use extension cables or multiple socket strips.
- ▸ Only use adapters and power cords approved by the manufacturer.
- ▸ If the power cord is too short and a longer one is not available, please contact an electrician to have the domestic installation adapted.

Portable multiple socket strips or portable power supply units may overheat and cause a fire.

- ▸ Do not place portable multiple socket strips or power supply units on the back of the appliance.

1.6 Safe use

⚠ WARNING – Risk of electric shock!

An ingress of moisture can cause an electric shock.

- ▸ Only use the appliance in enclosed spaces.
- ▸ Never expose the appliance to intense heat or humidity.
- ▸ Do not use steam- or high-pressure cleaners to clean the appliance.

⚠ WARNING – Risk of suffocation!

Children may put packaging material over their heads or wrap themselves up in it and suffocate.

- ▸ Keep packaging material away from children.
- ▸ Do not let children play with packaging material.

Children may breathe in or swallow small parts, causing them to suffocate.

- ▸ Keep small parts away from children.
- ▸ Do not let children play with small parts.

⚠ WARNING – Risk of explosion!

If the cooling circuit is damaged, flammable refrigerant may escape and explode.

- ▸ To accelerate the defrosting process, do not use any other mechanical devices or means other than those recommended by the manufacturer.
- ▸ If food is stuck to the freezer compartment, loosen it with a blunt implement such as the handle of a wooden spoon.

Products which contain flammable propellants and explosive substances may explode, e.g. spray cans.

- ▸ Do not store products which contain flammable propellants (e.g. spray cans) or explosive substances in the appliance.

⚠ WARNING – Risk of fire!

Electrical devices within the appliance may cause a fire, e.g. heaters or electric ice makers.

- ▸ Do not operate electrical devices within the appliance.

⚠ WARNING – Risk of injury!

Containers that contain carbonated drinks may burst.

- ▸ Do not store containers that contain carbonated drinks in the cool-fresh compartment below 1 °C (34 °F).
- ▸ Do not store containers that contain carbonated drinks in the freezer compartment.

Injury to the eyes caused by escaping flammable refrigerant and hazardous gases.

- ▸ Do not damage the tubes of the refrigerant circuit or the insulation.

The appliance may tip.

- ▸ Do not stand or support yourself on the base, runners or doors.

⚠ WARNING – Risk of cold burns!

Contact with frozen food and cold surfaces may cause burns by refrigeration.

- ▸ Never put frozen food straight from the freezer compartment into your mouth.
- ▸ Avoid prolonged contact of the skin with frozen food, ice and surfaces in the freezer compartment.

⚠ CAUTION – Risk of harm to health!

To prevent food from being contaminated, you must observe the following instructions.

- ▸ If the door is open for an extended period of time, this may lead to a considerable temperature increase in the compartments of the appliance.
- ▸ Regularly clean the surfaces that may come into contact with food and accessible drain systems.
- ▸ Flush the water system if water has not been drawn for five days.

- ▸ Store raw meat and fish in suitable containers in the refrigerator so that they do not touch or drip on other food.
- ▸ If the fridge/freezer is empty for an extended period of time, switch off the appliance, defrost it, clean it and leave the door open to prevent the formation of mould.

Metal or metal-style parts in the appliance may contain aluminium. If acidic food comes into contact with aluminium in the appliance, aluminium foil ions may pass into the food.

- ▸ Do not consume soiled food.

1.7 Damaged appliance

⚠ WARNING – Risk of electric shock!

If the appliance or the power cord is damaged, this is dangerous.

- ▸ Never operate a damaged appliance.
- ▸ Never pull on the power cord to unplug the appliance. Always unplug the appliance at the mains.
- ▸ If the appliance or the power cord is damaged, immediately unplug the power cord or switch off the fuse in the fuse box and turn off the water tap.
- ▸ Call customer services. → *Page 42*

Incorrect repairs are dangerous.

- ▸ Repairs to the appliance should only be carried out by trained specialist staff.
- ▸ Only use genuine spare parts when repairing the appliance.
- ▸ If the power cord of this appliance is damaged, it must be replaced with a special connection cable, which is available from the manufacturer or his Customer Service.

⚠ WARNING – Risk of fire!

If the tubes are damaged, flammable refrigerant and harmful gases may escape and ignite.

- ▸ Keep naked flames and ignition sources away from the appliance.
- ▸ Ventilate the room.

- ▶ Switch off the appliance. → *Page 19*
- ▶ Unplug the appliance from the mains or switch off the circuit breaker in the fuse box.
- ▶ Call after-sales service. → *Page 42*

2 Preventing material damage

ATTENTION!
The high weight of the appliance or, if not rolling freely, the appliance's castors may damage the floor when the appliance is moved.
- ▸ Transport the appliance using a sack truck.
- ▸ Use floor protection when moving the appliance, and do not move it in a zigzag fashion.

When the appliance door is closed, an open door pillar may damage the appliance.
- ▸ Never open the door pillar manually.
- ▸ If the door pillar has been opened, close it before closing the appliance door.

Using the base, runners or appliance doors as a seat surface or climbing surface may damage the appliance.
- ▸ Do not stand or support yourself on the base, runners or doors.

If the water pressure is too high or too low, the appliance may not be able to operate properly.
- ▸ Make sure that the water pressure in the water supply system is at least 200 kPa (2 bar) and max. 800 kPa (8 bar).
- ▸ If the water pressure exceeds the maximum value specified, a pressure-reducing valve must be installed between the drinking water connection and the hose set of the appliance.

Modified or damaged water hoses may result in material damage and damage to the appliance.
- ▸ Never kink, crush, modify or cut through water hoses.
- ▸ Only use the water hoses supplied with the appliance or genuine spare hoses.
- ▸ Never re-use water hoses that have been used before.
- ▸ Never pull on the water hose on the rear panel of the appliance.

Contamination with oil or fat may cause plastic parts and door seals to become porous.
- ▸ Keep plastic parts and door seals free of oil and grease.

Metal or metal-style parts in the appliance may contain aluminium. Aluminium reacts when it comes into contact with acidic foods.
- ▸ Do not store unpackaged food in the appliance.

3 Environmental protection and saving energy

3.1 Disposing of packaging

The packaging materials are environmentally compatible and can be recycled.
- ▸ Sort the individual components by type and dispose of them separately.

3.2 Saving energy

If you follow these instructions, your appliance will use less power.

Selecting the installation location
- ■ Keep the appliance out of direct sunlight.
- ■ Install the appliance as far away as possible from heating elements, cookers and other heat sources:
  - – Maintain a 30 mm clearance to electric or gas cookers.
  - – Maintain a 300 mm clearance to oil or solid-fuel cookers.
- ■ Never cover or block the external ventilation openings.

Saving energy during use

Note: The arrangement of the fittings does not affect the energy consumption of the appliance.

- Open the appliance only briefly and then close it carefully.
- Never cover or block the interior ventilation openings or the exterior ventilation openings.
- Transport purchased food in a cool bag and place in the appliance quickly.
- Allow warm food and drinks to cool down before storing them.
- Thaw frozen food in the refrigerator compartment to utilise the low temperature of the food.
- Always leave some space between the food and to the back panel.
- Vacuum the external ventilation grilles when they are dusty.

4 Installation and connection

4.1 Scope of delivery

After unpacking all parts, check for any transport damage and for completeness of delivery.
If you have any complaints, contact your dealer or our after-sales service → *Page 42*.

The delivery consists of the following:
- Free-standing appliance
- Equipment and accessories[1]
- Installation material
- Installation instructions
- User manual
- Customer service directory
- Warranty enclosure[2]
- Energy label
- Information on energy consumption and noises
- Information about Home Connect

4.2 Criteria for the installation location

⚠ **WARNING**
Risk of explosion!
If the appliance is in a space that is too small, a leak in the refrigeration circuit may result in a flammable mixture of gas and air.
- ▸ Only install the appliance in a space with a volume of at least 1 m^3 per 8 g refrigerant. The volume of refrigerant is indicated on the rating plate. → *"Appliance", Fig.* **1**/11, *Page 14*

The weight of the appliance ex works may be up to 155 kg depending on the model.
The subfloor must be sufficiently stable to bear the weight of the appliance.

Permitted room temperature

The permitted room temperature depends on the appliance's climate class.
The climate class can be found on the rating plate. → *"Appliance", Fig.* **1**/11, *Page 14*

Climate class	Permitted room temperature
SN	10 °C to 32 °C
N	16 °C to 32 °C
ST	16 °C to 38 °C
T	16 °C to 43 °C

[1] Depending on the appliance specifications

[2] Not in all countries

The appliance is fully functional within the permitted room temperature.
If an appliance with climate class SN is operated at colder room temperatures, the appliance will not be damaged up to a room temperature of 5 °C.

Over-and-under and side-by-side installation

If you want to install 2 refrigerating appliances one over the other or side by side, you must maintain a clearance of at least 150 mm between the appliances. Selected appliances can be installed without a minimum clearance. Ask your dealer or kitchen planner about this.

4.3 Installing the appliance

- Install the appliance in accordance with the enclosed installation instructions.

4.4 Preparing the appliance for the first time

1. Remove the informative material.
2. Remove the protective foil and transit bolts, e.g. remove the adhesive strips and carton.
3. Clean the appliance for the first time. → *Page 32*

4.5 Connecting the appliance to the drinking water connection

Requirements

- A corner valve must be installed on the water connection and be freely accessible following installation of the appliance.
- The water connection is checked and is of drinking water quality.

1. Rinse the drinking water connection thoroughly until the drinking water is no longer cloudy and contains no deposits.

   If the drinking water is still cloudy or contains deposits, install an external water filter system.
2. Install the drinking water connection according to the enclosed installation instructions.

4.6 Connecting the appliance to the electricity supply

1. Insert the non-heating appliance plug of the power cable into the appliance.
2. Insert the mains plug of the appliance's power cable in a socket nearby.

   The connection data of the appliance can be found on the rating plate. → *"Appliance", Fig.* **1**/11, *Page 14*
3. Check the mains plug is inserted properly.

✔ The appliance is now ready for use.

5 Familiarising yourself with your appliance

5.1 Appliance

You can find an overview of the parts of your appliance here.

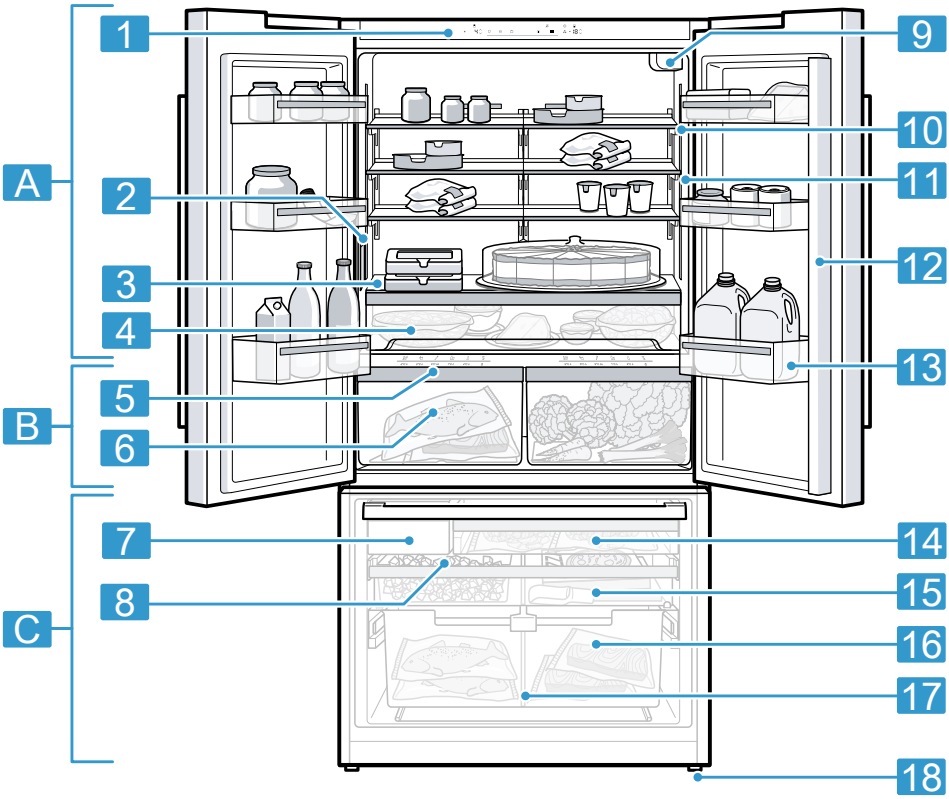

1

A	Refrigerator compartment → *Page 25*
B	Cool-fresh compartment → *Page 26*
C	Freezer compartment → *Page 27*
1	Control panel → *Page 14*
2	Water dispenser → *Page 29*

3	Fixed shelf → *Page 17*
4	Pull-out container → *Page 17*
5	Control panel (cool-fresh compartment) → *Page 16*
6	Cool-fresh container
7	Ice cube maker → *Page 30*
8	Ice cube container → *Page 18*
9	Water filter → *Page 28*
10	Interior lighting
11	Rating plate → *Page 43*

12	Door pillar with condensation protection → *Page 10*
13	Door storage compartment for large bottles → *Page 18*
14	Frozen food pull-out container → *Page 18*
15	Flat frozen food container → *Page 18*
16	Suspended frozen food container → *Page 18*
17	Container divider → *Page 17*
18	Screw foot

Note: Deviations between your appliance and the diagrams may differ with regard to their features and size.

5.2 Control panel

You can use the control panel to configure all functions of your appliance and to obtain information about the operating status.

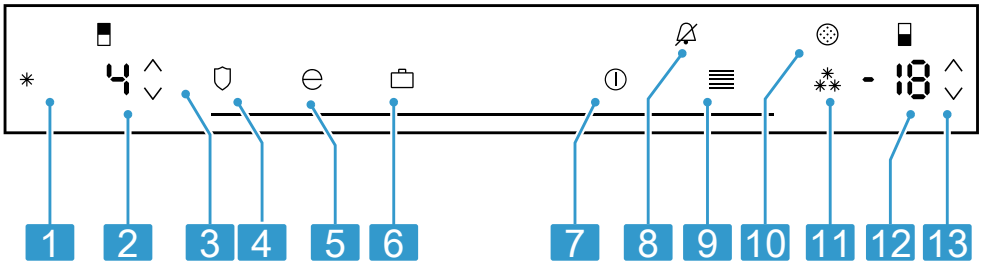

2

1	✳ switches Fast cooling on or off.
2	Displays the set temperature for the refrigerator compartment in °F or °C.

3	∨/∧ (Refrigerator compartment) sets the temperature of the refrigerator compartment.
4	⛉ switches freshness mode on or off.

5	⊖ switches energy-saving mode on or off.
6	🧳 switches holiday mode on or off.
7	⏻ switches the appliance on or off.
8	🔕 switches off the alarm.
9	☰ opens and closes the menu.

10	⊛ lights up when the filter needs to be replaced.
11	❄ switches Fast freezing on or off.
12	Displays the set temperature for the freezer compartment in °F or °C.
13	∨/∧ (Freezer compartment) sets the temperature of the freezer compartment.

5.3 Control panel (submenu)

You can configure further settings in the submenu.

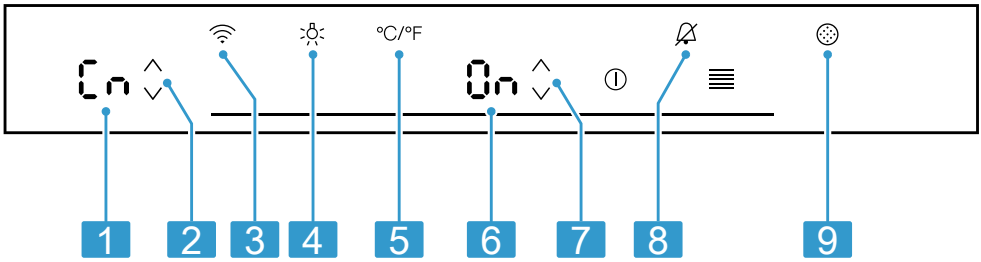

3

1	Displays the set submenu.
2	∨/∧ (Submenu) is used to navigate through the sub-menu.
3	☰ opens the menu for setting Home Connect.
4	☼ opens the menu for setting the lighting.

5	°C/°F opens the menu for changing the temperature unit.
6	Displays the settings of the submenu.
7	∨/∧ (Submenu setting) changes the submenu setting.
8	🔕 opens the menu for setting the door alarm.
9	⊛ opens the menu for setting the filter.

5.4 Control panel (cool-fresh compartment)

Using the control panel for the cool-fresh compartment, you can set the temperature and humidity in the cool-fresh compartment.

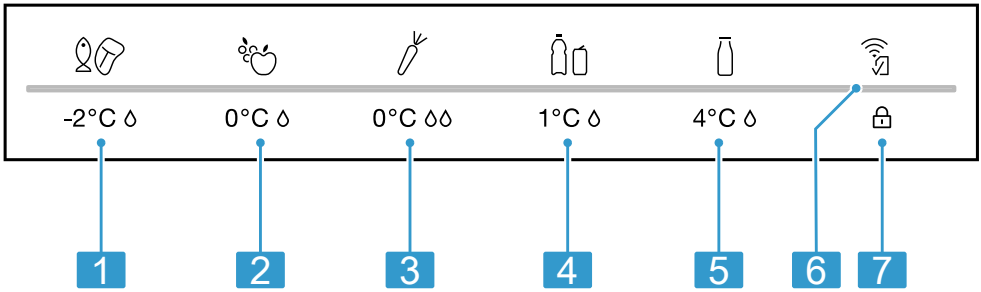

4

1	-2°C Sets the cool-fresh compartment storage setting for meat and fish.
2	0°C Sets the cool-fresh compartment storage setting for fruit.
3	0°C Sets the cool-fresh compartment storage setting for vegetables.
4	1°C Sets the cool-fresh compartment storage setting for beverages.
5	4°C Sets the cool-fresh compartment storage setting for dairy products.
6	lights up if user-defined settings have been set via the Home Connect app. You can find more information in the Home Connect app.
7	Switches the button lock for the control panel (cool-fresh compartment) off.

6 Features

The features of your appliance depend on the model.

6.1 Shelf

ATTENTION!
If fitted at an angle, the hooks on the shelf can scratch the rear panel of the refrigerator compartment.

- Ensure that the shelf is horizontal and that the hooks are properly fitted in place.

To vary the shelf as required, you can remove the shelf and re-insert it elsewhere.
→ *"Removing the shelf", Page 32*

Note
To avoid impeding the circulation of air, do not cover the inner ventilation openings.

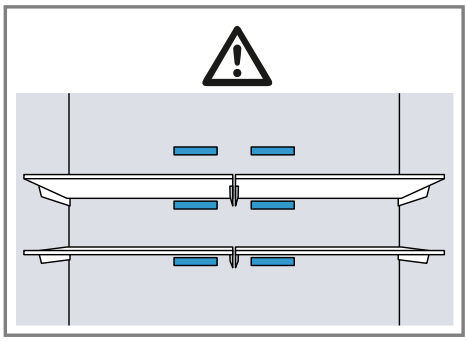

6.2 Fixed shelf

Always put the fixed shelf in the specified position.

6.3 Pull-out container

Store large plates or containers with processed food which has been covered in the pull-out container.

6.4 Cool-fresh container

Use the lower temperatures in the cool-fresh container to store highly perishable food, e.g. fish, meat and sausages.

6.5 Container divider

⚠ **WARNING**
Risk of suffocation!
Children may climb into the appliance and suffocate.
- ▸ Never remove the container divider from the suspended frozen food container.

ATTENTION!
The container divider for the suspended frozen food container will be damaged if removed.
- ▸ Never remove the container divider from the suspended frozen food container.

To vary the division of the suspended frozen food container, you can move the container divider.

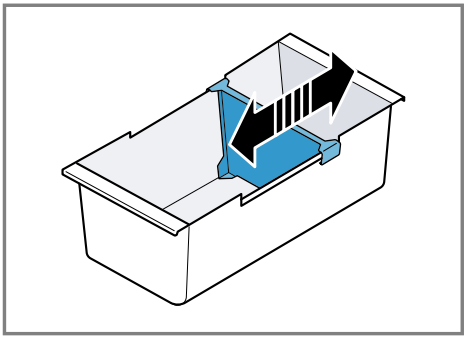

6.6 Flat frozen food container

Store flat frozen items, the ice storage container and the ice scoop in the flat frozen food container.

6.7 Frozen food pull-out container

In order to achieve an improved overview and to remove frozen food more quickly, remove frozen food pull-out container.

6.8 Suspended frozen food container

Store large frozen items in the suspended frozen food container.

6.9 Door rack

To adjust the door rack as required, you can remove the door rack and re-insert elsewhere.
→ *"Removing door rack", Page 33*

6.10 Ice cube container

If ice cube production is switched on, the ice cubes are automatically stored in the ice storage container.

ATTENTION!
The ice cube maker may become blocked or damaged by food or objects stored in the ice storage container.
- ▸ Never store food or objects in the ice storage container.

6.11 Accessories

Use original accessories. These have been made especially for your appliance.
The accessories for your appliance depend on the model.

Ice scoop
You can use the ice scoop to remove a portion of ice cubes.

7 Basic operation

7.1 Switching on the appliance

1. Electrically connect the appliance.
→ *Page 12*

   Note: If the appliance has been previously switched off using the control panel, press ⏻.
- ✔ The appliance begins to cool.
- ✔ A warning signal sounds, the temperature display (freezer compartment) flashes and 🔕 lights up because the freezer compartment is still too warm.
2. Switch off the warning tone using 🔕.
- ✔ 🔕 goes out as soon as the set temperature has been reached.
3. Set the required temperature.
→ *Page 19*

7.2 Operating tips

- ■ Once you have switched on the appliance, the set temperature is only reached after several hours. Do not put any food in the appliance until the set temperature has been reached.
- ■ The front and side panels of the housing heat up occasionally. This prevents condensation from forming.
- ■ When you close the door, a vacuum may be created. The door is then difficult to open again. Wait a moment until the vacuum is offset.

7.3 Switching off the appliance

- Press ⏻.

7.4 Setting the temperature unit

You can choose between the temperature unit °C and °F.

1. Press ☰.
2. Press °C/°F.
3. Press ∨/∧ (Submenu setting) until the setting display submenu shows F or C.
4. Press ☰.

7.5 Setting the temperature

Setting the refrigerator compartment temperature

- Press ∨/∧ (Refrigerator compartment) repeatedly until the temperature display (refrigerator compartment) shows the required temperature.

  The recommended temperature in the refrigerator compartment is 4 °C (39 °F).

Setting the freezer compartment temperature

- Press ∨/∧ (Freezer compartment) repeatedly until the temperature display (freezer compartment) shows the required temperature.

  The recommended temperature in the freezer compartment is −18 °C (0 °F).

7.6 Cool-fresh compartment storage setting

You can set the temperature and humidity of the cool-fresh container using predefined storage settings.

Tip: Further settings are available in the Home Connect app.

Setting the cool-fresh compartment storage setting

1. Press any touch field on the control panel (cool-fresh compartment).
2. Press and hold 🔒 until the light bar lights up fully.
3. Press the storage setting that you require.

8 Additional functions

8.1 Fast cooling

With Fast cooling, the refrigerator compartment cools as cold as possible.
Switch on Fast cooling before placing large quantities of food.

Note: When Fast cooling is switched on, increased noise may occur.

Switching on Fast cooling

- Press ✳.
- ✔ ✳ lights up.

Note: After approx. 6 hours, the appliance switches to normal operation.

Switching off Fast cooling

- Press ✳.
- ✔ The previously set temperature is displayed.

8.2 Fast freezing

With Fast freezing, the freezer compartment cools as cold as possible. Switch on Fast freezing one to two hours before placing food weighing 2 kg or more into the freezer compartment.
Use Fast freezing to accelerate ice cube production.
In order to utilise the freezer capacity, use Fast freezing.
→ *"Prerequisites for freezing capacity", Page 27*

Note: When Fast freezing is switched on, increased noise may occur.

Switching on Fast freezing

- ▸ Press ❄.
- ✔ ❄ lights up.

Note: After approx. 54 hours, the appliance switches to normal operation.

Switching off Fast freezing

- ▸ Press ❄.
- ✔ The previously set temperature is displayed.

8.3 Holiday mode

If you are going to be away for a long time, you can switch on energy-saving holiday mode on the appliance.

⚠ **CAUTION**
Risk of harm to health!
The refrigerator compartment heats up while the holiday mode is switched on. The increased temperature may cause bacteria to increase and spoil the food.
- ▸ When the holiday mode is switched on, do not store any food in the refrigerator compartment.

The appliance automatically sets the temperatures.

Refrigerator compartment	14 °C (58 °F)
Cool-fresh compartment	4 °C (40 °F)
Freezer compartment	Temperature remains unchanged

Note: While the holiday mode is activated, the ice cube production and the water dispenser are switched off.

Switching on holiday mode

- ▸ Press 💼.
- ✔ 💼 lights up.

Switching off holiday mode

- ▸ Press 💼.
- ✔ The previously set temperature is displayed.

8.4 Energy-saving mode

You can set the appliance to save energy with the energy-saving mode. The appliance automatically sets the temperatures.

Refrigerator compartment	8 °C (46 °F)
Cool-fresh compartment	0 °C (32 °F)
Freezer compartment	−16 °C (3 °F)

Switching on energy-saving mode

- ▸ Press ⊖.
- ✔ ⊖ lights up.

Switching off energy-saving mode

- ▸ Press ⊖.
- ✔ The previously set temperature is displayed.

8.5 Freshness mode

In order to keep the food fresh for longer, you can switch on the freshness mode on the appliance.
The appliance automatically sets the temperatures.

Refrigerator compartment	2 °C (36 °F)
Cool-fresh compartment	0 °C (32 °F)
Freezer compartment	Temperature remains unchanged

Switching freshness mode on

- ▸ Press ⛉.
- ✔ ⛉ lights up.

Switching off freshness mode

- ▸ Press ⛉.
- ✔ The previously set temperature is displayed.

8.6 Interior lighting

You can switch the interior lighting off or set the brightness.

0	The interior lighting is switched off
1	Minimum brightness
5	Maximum brightness

Setting the interior lighting

1. Press ☰.
2. Press ☼.
3. Press ∨/∧ (Submenu setting) until the setting display submenu shows the required setting.
4. Press ☰.

8.7 Rest mode

To ensure that you can also use the appliance on the Sabbath, the Rest mode switches off all non-essential functions.
During Rest mode, the following functions are switched off:

- Fast cooling
- Fast freezing
- Alarm
- Water dispenser
- Ice cube production
- Interior lighting
- Audible signals
- Messages on the control panel

Note: The brightness of the control panel lighting is reduced during the Rest mode.

Switching on Rest mode

- ▸ Press and hold 🕭 for 10 seconds until an audible signal sounds.
- ✔ 🔕 lights up.

Note: After approx. 80 hours, the appliance switches to normal operation.

Switching off Rest mode

- ▸ Press and hold 🔕 for five seconds until an audible signal sounds.

8.8 Filter change notification

Every six months, the filter change notification is switched on.
⛁ lights up.

Note: Increased water consumption switches the filter change notification on sooner.

Switching off the filter change notification

1. Replace the water filter.
   The bypass cap does not need to be replaced.

2. Press and hold ⊛ for three seconds.
✔ ⊛ goes out.
✔ The filter change status is reset.

8.9 Filter change status

If you replace the filter before the filter change notification, reset the filter change status.

1	The measurement of the filter change status is running
0	Resetting the filter change status

Resetting the filter change status

1. Press ☰.
2. Press ⊛.
✔ The submenu setting display shows 1.
3. Press ∧ (Submenu setting).
✔ The submenu setting display shows 0.
4. Press ☰.

9 Alarm

9.1 Door alarm

If the appliance door is open for a while, the door alarm switches on. A warning tone sounds and 🔔 flashes.

Switching off the door alarm

- Close the appliance door or press 🔔.
✔ The warning tone is switched off.
✔ 🔔 goes out.

Door alarm warning signal

You can activate or deactivate the door alarm warning signal.

On	Door alarm warning signal activated
OF	Door alarm warning signal deactivated

Activating the door alarm warning signal

1. Press ☰.
2. Press 🔔.
3. Press ∨/∧ (Submenu setting) until the setting display submenu shows the required setting.
4. Press ☰.

Deactivating the door alarm warning signal

1. Press ☰.
2. Press 🔔.
3. Press ∨/∧ (Submenu setting) until the setting display submenu shows the required setting.
4. Press ☰.

9.2 Temperature alarm

If the freezer compartment becomes too warm, the temperature alarm is switched on.
A warning tone sounds and the set temperature (freezer compartment) and 🔔 flash.

⚠ CAUTION
Risk of harm to health!
During the thawing process, bacteria may multiply and spoil the frozen food.
- Do not refreeze food after it has been defrosted or started to defrost.
- Refreeze food only after cooking.
- These items should no longer be stored for the maximum storage period.

The temperature alarm can be switched on in the following cases:
- The appliance is switched on.

Do not store any food until the appliance has reached the set temperature.
- Large quantities of fresh food are being placed inside.
  Switch on Fast freezing before placing large quantities of food in the appliance.
- The freezer compartment door is open for too long.
  Check whether the frozen food has defrosted or thawed.

Switching off the temperature alarm

- ▸ Press .
- ✔ The warning tone is switched off.
- ✔ The temperature display (freezer compartment) briefly indicates the warmest temperature reached in the freezer compartment. The temperature display (freezer compartment) then indicates the set temperature again.
- ✔ From this time on, the warmest temperature is measured again and saved.

10 Home Connect

This appliance is network-capable. Connect your appliance to a mobile device to control its functions via the Home Connect app.
The Home Connect services are not available in every country. The availability of the Home Connect function depends on the availability of Home Connect services in your country. You can find information about this at: www.home-connect.com.
To be able to use Home Connect, you must first set up the connection to the WLAN home network (Wi-Fi[1]) and to the Home Connect app.

After switching on the appliance, wait at least 2 minutes until internal device initialisation is complete. Only then should you set up Home Connect.

The Home Connect app guides you through the entire login process. Follow the instructions in the Home Connect app to configure the settings.

Tips

- Please consult the documents supplied by Home Connect.
- Please also follow the instructions in the Home Connect app.

Notes

- Please note the safety precautions in this instruction manual and make sure that they are also observed when operating the appliance via the Home Connect app.
  → *"Safety", Page 4*
- Operating the appliance on the appliance itself always takes priority. During this time it is not possible to operate the appliance using the Home Connect app.

10.1 Setting up Home Connect

Requirement: The Home Connect app has been installed on your mobile device.

[1] Wi-Fi is a registered trademark of the Wi-Fi Alliance.

1. Scan the QR code using the Home Connect app.

2. Follow the instructions in the Home Connect app.

10.2 Checking the signal strength

You should check the signal strength if no connection could be established.

1. Press ☰.
✔ ⌔ lights up and the submenu display shows Cn.
2. Press ∨/∧ (Submenu) repeatedly until the submenu display shows SI.
✔ The submenu display shows a value between setting 0 (no reception) and 3 (full reception).
3. Press ☰.

Note: The signal strength should be at least 2.

Improving the reception

If the signal strength is too weak, the connection may be interrupted.

▸ Carry out one of the solution options:
  – Place the router and refrigerator closer together.
  – Ensure that the connection is not interfered with by screening walls.
  – Install a repeater to strengthen the signal.

10.3 Installing updates for the Home Connect software

The appliance searches for updates to the Home Connect software at regular intervals.

Note: If updates are available, the submenu display shows UP.
To cancel the update and reset the submenu display to the set temperature, press any touch field.

1. Press ☰.
✔ ⌔ lights up and the submenu display shows Cn.
2. Press ∨/∧ (Submenu) repeatedly until the submenu display shows UP and the submenu setting display shows OF.
3. Press ∧ (Submenu setting).
✔ The submenu setting display shows an animation.
✔ The update is installed.
✔ The control panel is locked during the installation.
✔ If the installation is successful, the submenu setting display shows On.
4. If the submenu setting display shows Er, the appliance was unable to install the update.
  – Repeat the process at a later point.
5. If the update cannot be completed after several attempts, contact customer service → *Page 42* .

10.4 Resetting Home Connect settings

If your appliance experiences connection problems with the WLAN home network (Wi-Fi) or your appli-

ance wants to log into a different WLAN home network (Wi-Fi), you can reset the Home Connect settings.

1. Press ≣.
- ✔ lights up and the submenu display shows Cn.
2. Press ∨/∧ (Submenu) repeatedly until the submenu display shows rE and the submenu setting display shows OF.
3. Press ∧ (Submenu setting).
- ✔ The submenu setting display shows an animation for approx. 15 seconds.
- ✔ The submenu setting display shows On.
- ✔ The Home Connect settings have been reset.
4. Press ≣.

10.5 Remote diagnostics

Customer Service can use Remote Diagnostics to access your appliance if you contact them, have your appliance connected to the Home Connect server and if Remote Diagnostics is available in the country in which you are using the appliance.

Tip: For further information and details about the availability of Remote Diagnostics in your country, please visit the service/support section of your local website: www.home-connect.com

10.6 Data protection

Please see the information on data protection.
The first time your appliance is registered on a home network connected to the Internet, your appliance will transmit the following types of data to the Home Connect server (initial registration):

- Unique appliance identification (consisting of appliance codes as well as the MAC address of the Wi-Fi communication module installed).
- Security certificate of the Wi-Fi communication module (to ensure a secure data connection).
- The current software and hardware version of your appliance.
- Status of any previous reset to factory settings.

This initial registration prepares the Home Connect functions for use and is only required when you want to use the Home Connect functions for the first time.

Note: Please note that the Home Connect functions can only be utilised with the Home Connect app. Information on data protection can be retrieved in the Home Connect app.

11 Refrigerator compartment

You can keep dairy products, eggs, prepared meals, pastries, open preserves and hard cheese in the refrigerator compartment.
The temperature can be set from 2 °C (46 °F) to 8 °C (36 °F).
The refrigerator compartment can also be used to store highly perishable foods in the short to medium term. The lower the selected temperature, the longer the food remains fresh.

11.1 Tips for storing food in the refrigerator compartment

- Only store food when fresh and undamaged.
- Store food covered or in air-tight packaging.
- To avoid impeding the circulation of air and to prevent food from freezing, do not place food in front of the inner ventilation openings or in direct contact with the back wall.
- Allow hot food and drinks to cool down first before placing in the appliance.
- Observe the best-before date or use-by date specified by the manufacturer.

11.2 Chill zones in the refrigerator compartment

The air circulation in the refrigerator compartment creates different chill zones.

Coldest zone

The coldest zone is in the pull-out container.

Tip: Store highly perishable food such as fish, sausages and meat in the cool-fresh compartment.
→ *"Cool-fresh compartment", Page 26*

Warmest zone

The warmest zone is at the very top of the door.

Tip: Store food that does not spoil easily in the warmest zone, e.g. hard cheese and butter. Cheese can then continue to release its aroma and the butter will still be easy to spread.

12 Cool-fresh compartment

In the cool-fresh compartment, you can keep fresh food fresh up to three times longer than in the refrigerator compartment.
The temperature can be set from −2°C (29°F) to 4°C (40°F) using pre-defined storage settings.
Storing food in the fresh compartment retains the quality of the food better. The low temperature and the optimum moisture provide ideal storage conditions for fresh food.

12.1 Storage recommendations for the cool-fresh compartment

Storage setting	Food
-2°C ◊	Meat, fish and seafood
0°C ◊	Fruit, sausages, mixed load with fruit and vegetables
0°C ◊◊	Vegetables
1°C ◊	Beverages
4°C ◊	Milk, cheese and butter

Tip: Fruit, vegetables, drinks and dairy products may freeze below 0 °C (32 °F).
Only use the -2°C ◊ storage setting for meat and fish.

12.2 Storage times in the cool-fresh compartment at 0 °C (32 °F)

The storage times are dependent on the original quality of your food.

Food	Storage time
Fresh fish, seafood	up to 3 days
Poultry, meat (boiled/fried)	up to 5 days
Beef, pork, lamb, sausage (cold meat)	up to 7 days
Smoked fish, broccoli	up to 14 days
Salad greens, fennel, apricots, plums	up to 21 days
Soft cheese, yoghurt, quark, buttermilk, cauliflower	up to 30 days

13 Freezer compartment

You can store frozen food, freeze food and make ice cubes in the freezer compartment.
The temperature can be set from −16 °C (3 °F) to −24 °C (−11 °F).
Long-term storage of food should be at −18 °C (0 °F) or lower.
The freezer compartment can be used to store perishable food long-term. The low temperatures slow down or stop the spoilage.

13.1 Freezing capacity

The freezing capacity indicates the quantity of food that can be frozen right through to the centre within a specific period of time.
Information on freezing capacity can be found on the rating plate. → *"Appliance", Fig.* **1**/11, *Page 14*

Prerequisites for freezing capacity

1. When placing fresh food in the appliance, switch on Fast freezing. → *"Switching on Fast freezing", Page 20*
2. Place food in the frozen food pull-out container first.

13.2 Fully utilising the freezer compartment volume

Learn how to store the maximum amount of frozen food in the freezer compartment.

1. Remove all fittings from the freezer compartment, apart from the suspended frozen food container. → *Page 32*
2. Store food in the suspended frozen food container.

13.3 Tips for storing food in the freezer compartment

- Store food in air-tight packaging.
- Do not bring food which is to be frozen into contact with frozen food.
- Distribute the food over a wide area in the suspended frozen food container.
- To quickly and gently freeze larger quantities of fresh food, place this in the frozen food pull-out container.

13.4 Tips for freezing fresh food

- Freeze fresh and undamaged food only.
- Freeze food in portions.
- Cooked food is more suitable than food that can be eaten raw.
- Vegetables: Wash, chop up and blanch before freezing.
- Fruit: Wash, pit and perhaps peel, possibly add sugar or ascorbic acid solution.
- Food that is suitable for freezing includes baked items, fish and seafood, meat, game, poultry, eggs without shells, cheese, butter and quark, ready meals and leftovers.
- Food that is unsuitable for freezing includes lettuce, radishes, eggs in shells, grapes, raw apples and pears, yoghurt, sour cream, crème fraîche and mayonnaise.

Packing frozen food

If you select suitable packaging material and the correct type of packaging, you can determine the product quality and prevent freezer burn.

1. Place the food in the packaging.
2. Squeeze out the air.
3. Pack food airtight to prevent it from losing flavour and drying out.
4. Label the packaging with the contents and the date of freezing.

13.5 Shelf life of frozen food at –18 °C (0 °F)

Food	Storage time
Fish, sausages, prepared meals and baked goods	up to 6 months
Poultry, meat	up to 8 months
Vegetables, fruit	up to 12 months

13.6 Defrosting methods for frozen food

⚠ **CAUTION**
Risk of harm to health!
During the thawing process, bacteria may multiply and spoil the frozen food.

- ▸ Do not refreeze food after it has been defrosted or started to defrost.
- ▸ Refreeze food only after cooking.
- ▸ These items should no longer be stored for the maximum storage period.

- Defrost animal-based food, such as fish, meat, cheese, quark, in the refrigerator compartment.
- Defrost bread at room temperature.
- Prepare food for immediate consumption in the microwave, in the oven or on the hob.

14 Water system

Your appliance is equipped with water-carrying components.
The water system only works if a water filter or a bypass cap is installed.
Switch off ice cube production before disconnecting the appliance from the drinking water connection.
→ *Page 31*

14.1 Water filter

The water filter filters particles and the taste of chlorine out of the water. The water filter reduces further contamination, e.g. from chloramines, lead and pharmaceutical products.

Note: The water filter does not filter bacteria or microbes out of the water.

Change the water filter:
- Every 6 months.
- If ⊛ lights up.
- If the water output has visibly reduced.

Tips
- A new water filter can be purchased from customer service, your dealer or our website.
- If you do not want to use a water filter in your appliance or an external water filter system is installed, you can permanently replace the water filter with a bypass cap.
  The bypass cap filters only large particles out of the water and can be cleaned as required.
  A bypass cap can be purchased from customer service or our website.

Changing the water filter or replacing it with a bypass cap

1. Reach into the recess below the filter cover ①, pull it forwards slightly and move it to the bottom left ②.

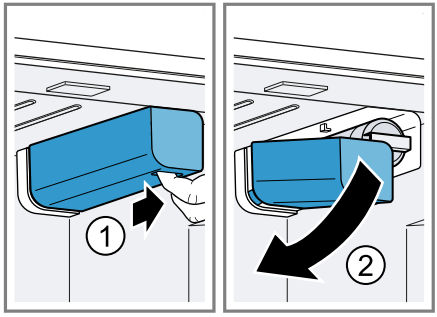

2. Pull the water filter down to the left ①, turn it counterclockwise by 90° ② and remove it ③.
   – Remove the water filter with care as it is under pressure.

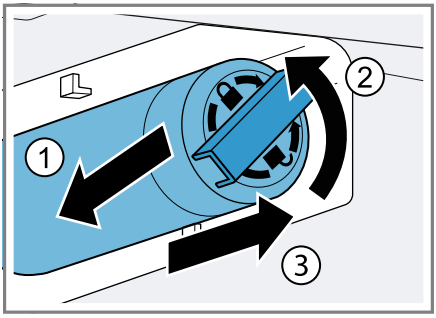

   Note: When removing it, a small amount of water may drip out of the water filter. Remove the drips of water with a dry cloth.

   Tip: You can dispose of the old water filter with your household waste.
3. Insert the new water filter or the bypass cap all the way into the filter opening, turn it 90° clockwise all the way and fold it up to the right.
4. Move the filter cover up to the right and slide it back as far as it will go.
5. Discard the ice cubes produced during the first 24 hours, and dispense water for five minutes and then dispose of this.

14.2 Water dispenser

Dispense cold water via the water dispenser.

Putting the water dispenser into operation

Note: Once the appliance has been connected or a new water filter has been installed, there will be air in the water system.

Requirement: The appliance is connected to the drinking water connection.

1. Keep dispensing water until it contains no more air bubbles.

   Remove any splashes of water with a dry cloth.
2. For hygiene reasons, dispense water for 5 minutes and discard.

Dispensing water

- Press and hold the glass against the dispensing button ① or hold the glass under the water dispenser and press ◊ ②.

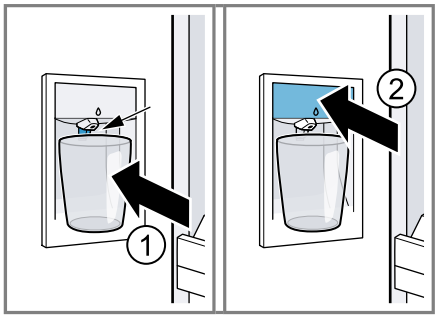

Notes

- After a while of continuous dispensing, the water stops being dispensed. Wait a few seconds before dispensing water again.
- After water has been dispensed several times consecutively, water stops being dispensed. Wait a few minutes before dispensing water again.

14.3 Ice cube maker

Use the ice cube maker to produce ice cubes.

⚠ WARNING
Risk of injury!
Rotating parts may cause injury.
- Never reach into or underneath the ice cube maker.

Note: The ice cube maker automatically detects that the ice storage container is full and stops producing ice cubes.
It may take up to 48 hours until the ice storage container is full.

Tips

- You can accelerate ice cube production by setting a colder freezer compartment temperature or by switching on Fast freezing. This slightly increases energy consumption.
- If the ice cubes taste stale, dispose of the remaining ice cubes and the cubes produced over the next 24 hours. If the ice cubes still taste stale, change the water filter.

Putting the ice cube maker into operation

Notes

- Ice cube production starts as soon as the appliance is switched on and the freezer compartment has reached the set temperature.
- As soon as the freezer compartment reaches the set temperature, the first batch of ice cubes will be ready in approximately 4 hours.

Requirement: The appliance is connected to the drinking water connection.

- For hygiene reasons, discard the ice cubes produced within the first 24 hours.

Switching on ice cube production

- Lift the ice cube maker cover upwards ① and press the ice cube maker button ②.

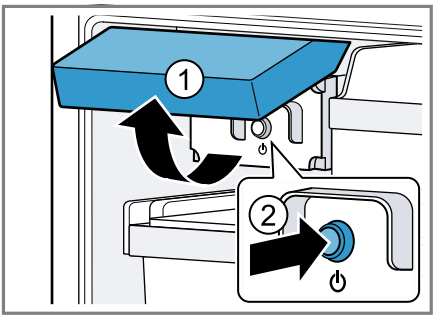

✔ The ice cube maker button lights up.

Note: If you press and hold the ice cube maker button for three seconds, the filter change status is reset.

Switching off ice cube production

- Lift the ice cube maker cover upwards ① and press the ice cube maker button ②.

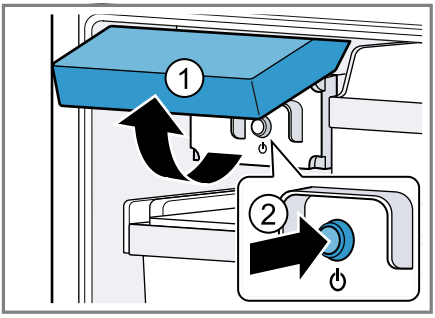

✔ The ice cube maker button goes out.

Note: If you press and hold the ice cube maker button for three seconds, the filter change status is reset.

15 Defrosting

15.1 Defrosting in the refrigerator compartment

The refrigerator compartment in your appliance defrosts automatically.

15.2 Defrosting in the cool-fresh compartment

The cool-fresh compartment in your appliance defrosts automatically.

15.3 Defrosting in the freezer compartment

The fully automatic NoFrost system ensures that the freezer compartment remains frost-free. Defrosting is not required.

16 Cleaning and servicing

To keep your appliance working efficiently for a long time, it is important to clean and maintain it carefully. Customer Service must clean inaccessible points. Cleaning by customer service can give rise to costs.

16.1 Preparing the appliance for cleaning

1. Switch off the appliance.
   → *Page 19*
2. Disconnect the appliance from the power supply.

   Unplug the appliance from the mains or switch off the circuit breaker in the fuse box.
3. Take out all of the food and store it in a cool place.

Place ice packs (if available) onto the food.

4. Remove all fittings and accessories from the appliance. → *Page 32*
5. Remove the telescopic rails. → *Page 34*
6. Remove the refrigerator compartment glass plate. → *Page 35*
7. Remove the cool-fresh container cover. → *Page 36*

16.2 Cleaning the appliance

⚠ WARNING
Risk of electric shock!
An ingress of moisture can cause an electric shock.
- ▸ Do not use steam- or high-pressure cleaners to clean the appliance.

Liquid in the lighting or in the controls can be dangerous.
- ▸ The rinsing water must not drip into the lighting or controls.

ATTENTION!
Unsuitable cleaning products may damage the surfaces of the appliance.
- ▸ Do not use hard scouring pads or cleaning sponges.
- ▸ Do not use harsh or abrasive detergents.
- ▸ Do not use cleaning products with a high alcohol content.
- ▸ Do not use stainless-steel cleaning agents on the outside of the appliance.

If you clean fittings and accessories in the dishwasher, this may cause them to become deformed or discolour.
- ▸ Never clean fittings and accessory in the dishwasher.

1. Prepare the appliance for cleaning. → *Page 31*
2. Clean the inside of the appliance, the outside of the appliance, the fittings, the accessories and the door seals with a dish cloth, lukewarm water and a little pH-neutral detergent.
3. Dry thoroughly with a soft, dry cloth.
4. Insert the fittings and install the appliance components.
5. Electrically connect the appliance. → *Page 12*
6. Switch on the appliance. → *Page 18*
7. Putting the food into the appliance.

16.3 Removing the fittings

If you want to clean the fittings thoroughly, remove these from your appliance.

Removing the shelf

- ▸ Lift the shelf ① and remove it ②.

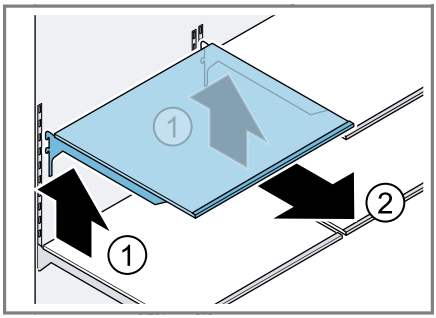

Removing the fixed shelf

1. Pull out the pull-out container.

2. Lift the fixed shelf at the front ① and remove it ②.

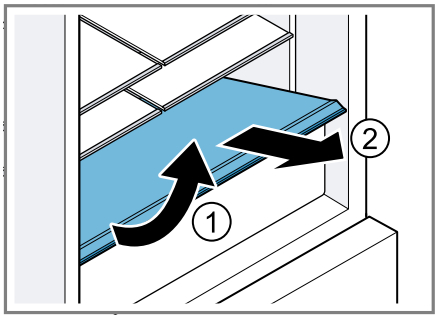

Removing door rack

▸ Lift the door rack and remove it.

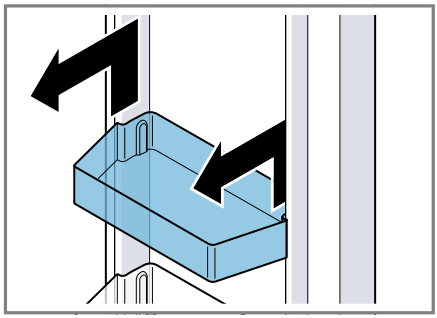

Removing pull-out containers

1. Pull out the pull-out container as far as it will go.
2. Lift the pull-out container at the front ① and remove it ②.

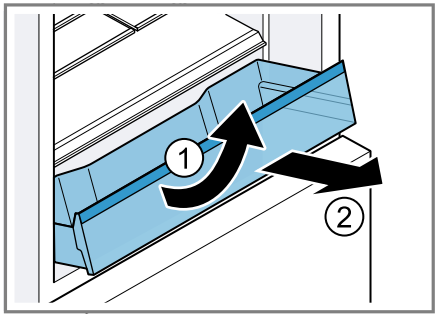

Removing the cool-fresh container

1. Pull out the cool-fresh container as far as it will go.
2. Lift the cool-fresh container at the front ① and remove it ②.

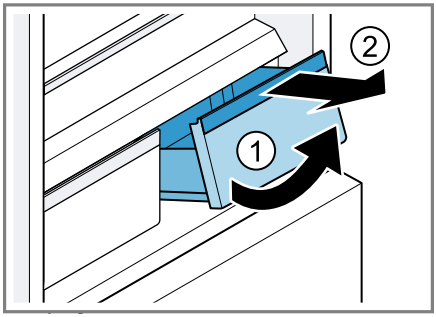

Removing the frozen food pull-out container

1. Pull out the frozen food pull-out container as far as it will go.
2. Lift the frozen food pull-out container at the front and remove it.

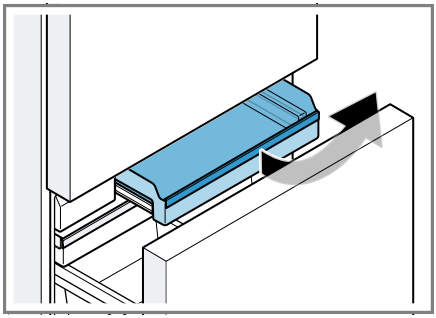

Removing the flat frozen food container

1. Pull out the flat frozen food container as far as it will go.
2. Lift the flat frozen food container at the front and remove it.

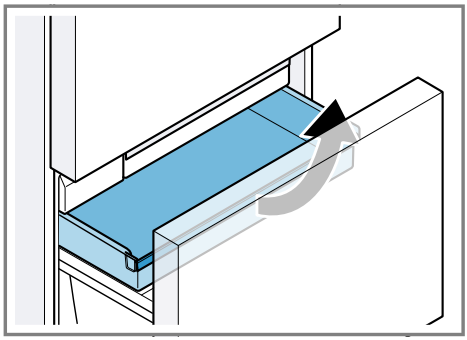

Removing the ice cube container

1. Pull out the flat frozen food container as far as it will go.
2. Lift the ice cube container at the front and remove it.

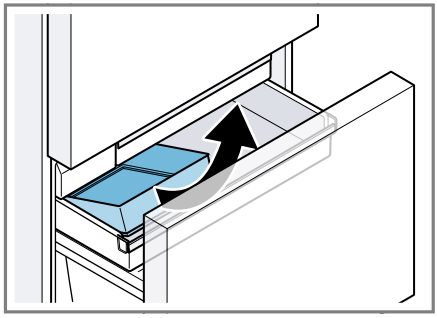

Removing the suspended frozen food container

- Lift out the suspended frozen food container.

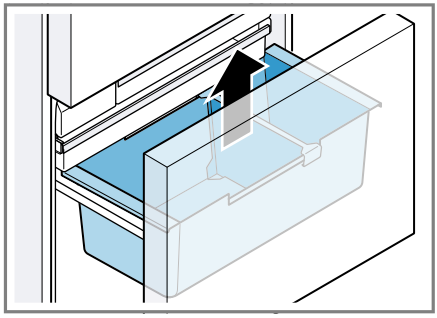

16.4 Removing appliance components

If you want to clean your appliance thoroughly, you can remove certain components from your appliance.

Telescopic rails

You can remove the telescopic rails in order to clean them thoroughly.

Removing telescopic rails

1. Pull out the telescopic rail.

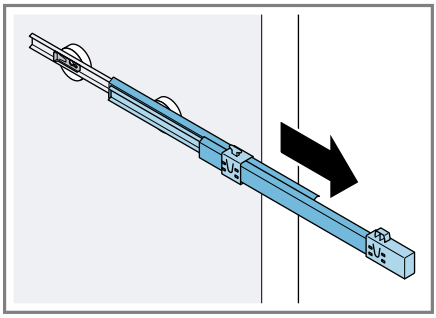

2. Move the lock in the direction of the arrow ① and loosen the pin from the rear ②.

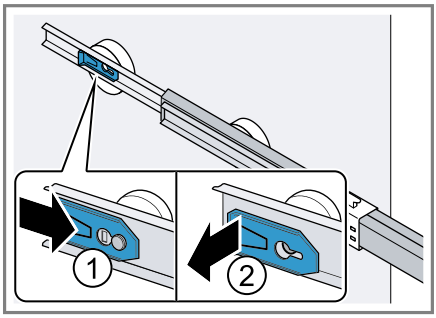

3. Push in the telescopic rail.

4. Push the telescopic rail backwards above the rear pin ① and disengage ②.

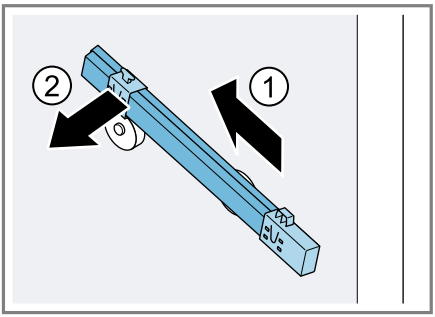

Installing telescopic rails

1. Place the extended telescopic rail on the front pin ① and pull it forwards slightly to lock in place ②.

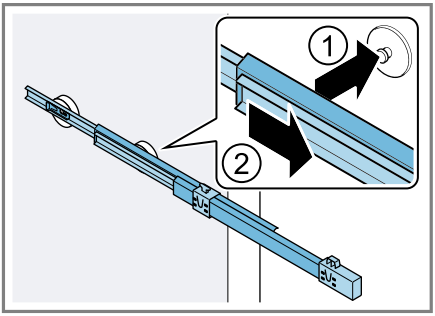

2. Place the telescopic rail on the rear pin ① and push the locking mechanism back ②.

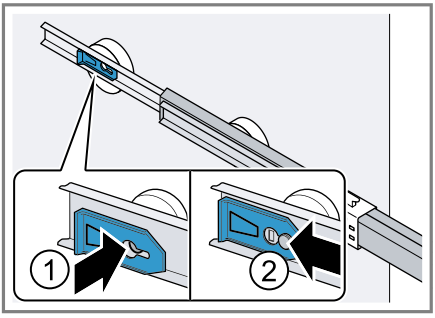

Refrigerator compartment glass plate

To clean the refrigerator compartment glass plate thoroughly, you can remove it.

Removing the refrigerator compartment glass plate

1. Grip both the rear recesses at the base of the refrigerator compartment and lift the refrigerator compartment glass plate ①. Slide the refrigerator compartment glass plate towards the rear ②.

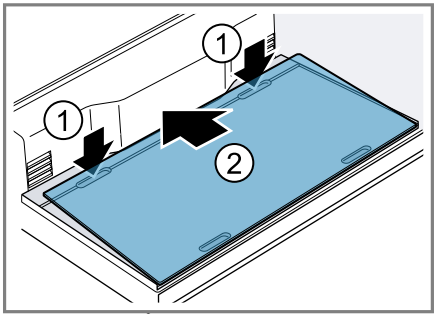

2. Grip both the front recesses at the base of the refrigerator compartment ①, lift the refrigerator compartment glass plate and remove it ②.

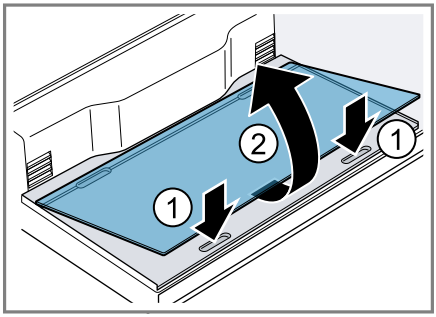

Install the refrigerator compartment glass plate

- Place the refrigerator compartment glass plate at the rear of the base of the refrigerator compartment ① and lower it ②.

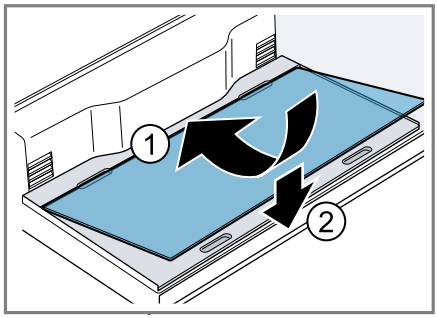

Cool-fresh container cover

To clean the cool-fresh container cover thoroughly, you can remove it.

Removing the cool-fresh container cover

1. Remove the cool-fresh container.
2. Unclip the cool-fresh container cover ① and remove it ②.

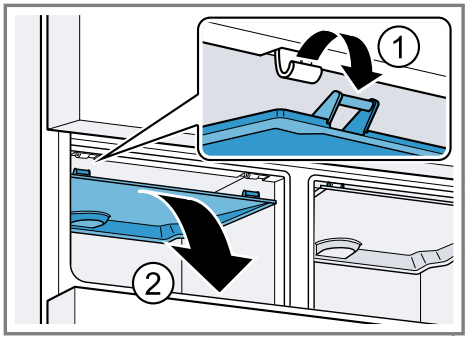

Fitting the cool-fresh container cover

1. Slide the cool-fresh container cover symmetrically towards the rear ① and clip it into place ②.

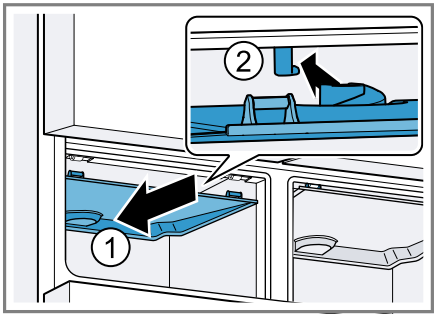

2. Click the cool-fresh container cover into place.

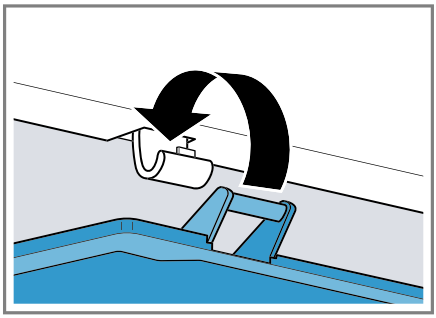

3. Fit the cool-fresh container.

17 Troubleshooting

You can rectify minor faults on your appliance yourself. Read the troubleshooting information before contacting after-sales service. This will avoid unnecessary costs.

⚠ WARNING
Risk of electric shock!
Incorrect repairs are dangerous.
- ▸ Repairs to the appliance should only be carried out by trained specialist staff.
- ▸ Only use genuine spare parts when repairing the appliance.
- ▸ If the power cord of this appliance is damaged, it must be replaced with a special connection cable, which is available from the manufacturer or his Customer Service.

Fault	Cause and troubleshooting
The appliance is not cooling, the displays and lighting are lit.	Showroom mode is switched on. **1.** Press and hold 🔕 for 15 seconds until three audible signals sound. ✔ The lighting on the control panels and the interior lighting switch themselves off briefly. ✔ 🔕 flashes and a warning signal sounds. **2.** Press 🔕. **3.** After a short time, check whether your appliance is cooling.
The LED lighting does not work.	Different causes are possible. ▸ Call customer service. The customer service number can be found in the enclosed customer service directory.
Home Connect is not working properly.	Different causes are possible. ▸ Go to www.home-connect.com.
E or d appears in the temperature display.	The electronics have detected a fault. **1.** Switch off the appliance. → *Page 19* **2.** Disconnect the appliance from the mains. Unplug the appliance from the mains or switch off the circuit breaker in the fuse box. **3.** Reconnect the appliance after five minutes. **4.** Switch on the appliance. → *Page 18* **5.** If the message still appears on the display, call customer service. The customer service number can be found in the enclosed customer service directory.

Fault	Cause and troubleshooting
A warning signal sounds and 🔕 flashes. The door alarm is switched on.	The appliance door is open. ▸ Close the appliance door.
A warning tone sounds and the temperature display (freezer compartment) and 🔕 flash. The temperature alarm is switched on.	Different causes are possible. **1.** Press 🔕. ✔ The alarm is switched off. **2.** After several hours, check whether the set freezer compartment temperature has been reached again.
	External ventilation openings are covered up. ▸ Remove any obstructions from in front of the external ventilation openings.
	Larger quantities of fresh food have been put in. ▸ Switch on Fast freezing before placing a larger amount of food in the appliance. → *"Switching on Fast freezing", Page 20*
The temperature differs greatly from the setting.	Different causes are possible. **1.** Switch off the appliance. → *Page 19* **2.** Switch the appliance back on after five minutes. → *Page 18* – If the temperature is too warm, check the temperature again after a couple of hours. – If the temperature is too cold, check the temperature again on the following day.
Water is leaking out of the appliance.	The water connection or water hose is not leak-tight. ▸ Check if the water connections are fastened firmly and the water hose is undamaged. If necessary, replace the water hose.
Water output is reduced.	Low water pressure. ▸ Check the water pressure of the water supply system or the external water filter system, e.g. reverse osmosis system. Connect the appliance only to a water connection with sufficient water pressure. → *Page 10*
	The water filter is blocked. ▸ Change the water filter. → *Page 29*
Water is dripping from the water dispenser.	Air is in the water system. ▸ Keep dispensing water until it contains no more air.

Fault	Cause and troubleshooting
The water dispenser is not functioning.	There is no water supply. ▸ Ensure that there is a water supply and that the corner valve on the water connection is open. Contact an installer if necessary.
	Kink in the water hose. ▸ Turn off the water supply and straighten the kink in water hose. If necessary, replace the water hose.
Ice cube production is low.	The appliance has only recently been connected. ▸ Wait approximately four hours until the first batch of ice cubes is ready.
	The freezer compartment has been opened frequently or for an extended period of time. ▸ Check ice cube production after a few hours.
	Low water pressure. ▸ Check the water pressure of the water supply system or the external water filter system, e.g. reverse osmosis system. Connect the appliance only to a water connection with sufficient water pressure. → *Page 10*
	The water filter is blocked. ▸ Change the water filter. → *Page 29*
	Food or objects are blocking the fill level sensor for the ice cube maker. ▸ Remove all food and objects from the ice storage container.
	Fault in the ice cube maker. **1.** Switch off the appliance. → *Page 19* **2.** Disconnect the appliance from the mains. Unplug the appliance from the mains or switch off the circuit breaker in the fuse box. **3.** Reconnect the appliance after five minutes. **4.** Switch on the appliance. → *Page 18* **5.** If the fault persists, call customer service. The customer service number can be found in the enclosed customer service directory.
The ice cube maker is not functioning.	Ice cube production is switched off. ▸ Switch on ice cube production. → *Page 31*
	There is no water supply.

Fault	Cause and troubleshooting
The ice cube maker is not functioning.	▸ Ensure that there is a water supply and that the corner valve on the water connection is open. Contact an installer if necessary.
	Kink in the water hose. ▸ Turn off the water supply and straighten the kink in water hose. If necessary, replace the water hose.
	Fault in the ice cube maker. **1.** Switch off the appliance. → *Page 19* **2.** Disconnect the appliance from the mains. Unplug the appliance from the mains or switch off the circuit breaker in the fuse box. **3.** Reconnect the appliance after five minutes. **4.** Switch on the appliance. → *Page 18* **5.** If the fault persists, call customer service. The customer service number can be found in the enclosed customer service directory.
The appliance hums, bubbles, buzzes, gargles, clicks, crackles or rumbles.	Not a fault. A motor is running, e.g. refrigerating unit, fan. Refrigerant flows through the pipes. The motor, switches, solenoid valves or water valves are switching on or off. Automatic defrosting is running. Ice cubes fall into the ice storage container. No action required.
The appliance makes noises.	The appliance is not level. ▸ Align the appliance using a spirit level and the screw feet.
	The appliance is not free-standing. ▸ Observe the minimum clearances for the appliance.
	Fittings wobble or stick. ▸ Check the removable fittings and, if required, replace these.
	Bottles or containers are touching. ▸ Move the bottles or containers away from each other.
	Fast freezing is switched on. No action required.

17.1 Power failure

During a power failure, the temperature in the appliance rises; this reduces the storage time and the quality of the frozen food.
On the website for your appliance, the technical data provides you with the storage times for frozen food in the event of a fault.

Notes

- Open the appliance as little as possible during a power failure and do not place any other food in the appliance.
- Check the quality of the food immediately after a power failure.
  - Dispose of any frozen food that has defrosted and is hotter than 5 °C.
  - Cook or fry slightly thawed frozen food, and then either consume it or freeze it again.

17.2 Conducting an appliance self-test

Your appliance has an appliance self-test which displays faults that can be eliminated by your customer service.

1. Switch off the appliance. → *Page 19*
2. Disconnect the appliance from the power supply.

   Unplug the appliance from the mains or switch off the circuit breaker in the fuse box.
3. Electrically reconnect the appliance after five minutes. → *Page 12*
4. Switch on the appliance. → *Page 18*
5. Within the first two minutes after switching on, press and hold ☰ for 10 seconds until an audible signal sounds.

✔ The appliance self-test starts.

✔ While the appliance self-test is running, a long audible signal sounds.

✔ If, at the end of the appliance self-test, two audible signals sound and the temperature display indicates the set temperature, your appliance is OK. The appliance switches to normal operation.

✔ If, at the end of the appliance self-test, 5 audible signals sound and the submenu setting display shows Er, inform customer service.

18 Storage and disposal

18.1 Taking the appliance out of operation

1. Switch off the appliance. → *Page 19*
2. Disconnect the appliance from the power supply.

   Unplug the appliance from the mains or switch off the circuit breaker in the fuse box.
3. Disconnect the appliance from the drinking water connection.
4. Remove all of the food.
5. Remove the water filter. → *Page 29*
6. Clean the appliance. → *Page 32*
7. **ATTENTION!** Objects jammed between the door and the housing may damage the door hinge.

▸ Open the door until it remains open by itself.

▸ Do not insert any objects between the door and the housing.

To guarantee the ventilation inside the appliance, leave the appliance open.

18.2 Disposing of old appliance

Valuable raw materials can be reused by recycling.

⚠ WARNING
Risk of harm to health!
Children can lock themselves in the appliance, thereby putting their lives at risk.
- ▸ Leave shelves and containers inside the appliance to prevent children from climbing in.
- ▸ Keep children away from the redundant appliance.

⚠ WARNING
Risk of fire!
If the tubes are damaged, flammable refrigerant and harmful gases may escape and ignite.
- ▸ Do not damage the tubes of the refrigerant circuit or the insulation.

1. Unplug the appliance from the mains.
2. Cut through the power cord.
3. Dispose of the appliance in an environmentally friendly manner.

   Information about current disposal methods are available from your specialist dealer or local authority.

This appliance is labelled in accordance with European Directive 2012/19/EU concerning used electrical and electronic appliances (waste electrical and electronic equipment - WEEE). The guideline determines the framework for the return and recycling of used appliances as applicable throughout the EU.

19 Customer Service

Function-relevant genuine spare parts according to the corresponding Ecodesign Order can be obtained from Customer Service for a period of at least 10 years from the date on which your appliance was placed on the market within the European Economic Area.

Note: Under the terms of the manufacturer's warranty applicable to the location, the use of Customer Service is free of charge. The minimum duration of the warranty (manufacturer's warranty for private consumers) in the European Economic Area is 2 years according to the terms of warranty applicable to the location. The terms of warranty do not affect other rights or claims held by yourself under local legislation.

Detailed information on the warranty period and terms of warranty in your country is available from our aftersales service, your retailer or on our website.
If you contact Customer Service, you will require the product number (E-Nr.) and the production number (FD) of your appliance.
The contact details for Customer Service can be found in the enclosed Customer Service directory or on our website.

19.1 Product number (E-Nr.) and production number (FD)

You can find the product number (E-Nr.) and the production number (FD) on the appliance's rating plate.
→ *"Appliance", Fig.* **1**/11, *Page 14*

Make a note of your appliance's details and the Customer Service telephone number to find them again quickly.

20 Technical data

Refrigerant, cubic capacity and further technical specifications can be found on the rating plate.
→ *"Appliance", Fig.* **1**/11, *Page 14*
This product contains a light source from energy efficiency class E. The light source is available as a spare part and should only be replaced by trained specialist staff.
This product contains a second light source from energy efficiency class G. The light source is available as a spare part and should only be replaced by trained specialist staff.
This product contains a third light source from energy efficiency class G. The light source is available as a spare part and should only be replaced by trained specialist staff.
You can find more information about your model online at https://eprel.ec.europa.eu/[1]. This web address is linked to the official EU EPREL product database. Please then follow the instructions on searching for the model. The model identifier is made up of the characters before the slash in the product number (E-Nr.) on the rating plate. Alternatively, you can also find the model identifier in the first line of the EU energy label.

21 Declaration of Conformity

BSH Hausgeräte GmbH hereby declares that the appliance with Home Connect functionality conforms to the basic requirements and other relevant provisions of Directive 2014/53/EU.
A detailed RED Declaration of Conformity can be found online at www.gaggenau.com among the additional documents on the product page for your appliance.

CE

Hereby, BSH Hausgeräte GmbH declares that the appliance with Home Connect functionality is in compliance with relevant statutory requirements.[2]
A detailed Declaration of Conformity can be found online at www.gaggenau.com/gb among the additional documents on the product page for your appliance.[2]

UK CA

Only applies to Great Britain

2.4 GHz band (2400–2483.5 MHz): Max. 100 mW
5 GHz band (5150–5350 MHz + 5470–5725 MHz): Max. 100 mW

	BE	BG	CZ	DK	DE	EE	IE	EL	ES
	FR	HR	IT	CY	LI	LV	LT	LU	HU

[1] Only applies to countries in the European Economic Area

[2] Only applies to Great Britain

	MT	NL	AT	PL	PT	RO	SI	SK	FI
	SE	NO	CH	TR	IS	UK (NI)			
5 GHz WLAN (Wi-Fi): For indoor use only.									

AL	BA	MD	ME	MK	RS	UK	UA
5 GHz WLAN (Wi-Fi): For indoor use only.							

BSH Hausgeräte GmbH
Carl-Wery-Straße 34
81739 München, GERMANY
www.gaggenau.com

Valid within Great Britain:
Imported to Great Britain by
BSH Home Appliances Ltd.
Grand Union House
Old Wolverton Road
Wolverton, Milton Keynes
MK12 5PT
United Kingdom

GAGGENAU

9001716558 en 020901