Gaggenau

en User manual and installation instructions

BOP2101.2

BOP2101.2

Oven

Table of contents

INFORMATION FOR USE

1 Safety ... 2
2 Preventing material damage ... 4
3 Environmental protection and saving energy ... 5
4 Familiarising yourself with your appliance ... 6
5 Accessories ... 9
6 Before using for the first time ... 11
7 Basic operation ... 11
8 Timer functions ... 12
9 Long-term timer ... 13
10 Childproof lock ... 14
11 Individual recipes ... 14
12 Home Connect ... 15
13 Basic settings ... 17
14 Cleaning and servicing ... 19
15 Catalytic cleaning ... 21
16 Troubleshooting ... 22
17 Disposal ... 23
18 How it works ... 24
19 Customer Service ... 43
20 Declaration of Conformity ... 44

21 INSTALLATION INSTRUCTIONS ... 44
21.1 General installation instructions ... 44

⚠ 1 Safety

Observe the following safety instructions.

1.1 General information

- Read this instruction manual carefully.
- Keep the instruction manual and the product information safe for future reference or for the next owner.
- Do not connect the appliance if it has been damaged in transit.

1.2 Intended use

This appliance is designed only to be built into kitchen units. Read the special installation instructions.
Only a licensed professional may connect appliances without plugs. Damage caused by incorrect connection is not covered under the warranty.
Only use this appliance:
- To prepare meals and drinks.
- in private households and in enclosed spaces in a domestic environment.
- up to an altitude of max. 2000 m above sea level.

1.3 Restriction on user group

This appliance may be used by children aged 8 or over and by people who have reduced physical, sensory or mental abilities or inadequate experience and/or knowledge, provided that they are supervised or have been instructed on how to use the appliance safely and have understood the resulting dangers.
Do not let children play with the appliance.
Children must not perform cleaning or user maintenance unless they are at least 15 years old and are being supervised.
Keep children under the age of 8 years away from the appliance and power cable.

1.4 Safe use

Always place accessories in the cooking compartment the right way round.
→ *"Accessories", Page 9*

⚠ WARNING – Risk of fire!
Combustible objects that are left in the cooking compartment may catch fire.
- ▸ Never store combustible objects in the cooking compartment.
- ▸ If smoke is emitted, the appliance must be switched off or the plug must be pulled out and the door must be held closed in order to stifle any flames.

Loose food remnants, fat and meat juices may catch fire.
- ▸ Before using the appliance, remove the worst of the food residues and remnants from the cooking compartment, heating elements and accessories.

Opening the appliance door creates a draught. Greaseproof paper may come into contact with the heating element and catch fire.

- ▸ Never place greaseproof paper loosely over accessories when preheating the appliance and while cooking.
- ▸ Always cut greaseproof paper to size and use a plate or baking tin to hold it down.

⚠ WARNING – Risk of burns!

The appliance and its parts that can be touched become hot during use.

- ▸ Caution should be exercised here in order to avoid touching heating elements.
- ▸ Young children under 8 years of age must be kept away from the appliance.

Accessories and cookware get very hot.

- ▸ Always use oven gloves to remove accessories or cookware from the cooking compartment.

When the cooking compartment is hot, any alcoholic vapours inside may catch fire. The appliance door may spring open. Hot steam and jets of flame may escape.

- ▸ Only use small quantities of drinks with a high alcohol content in food.
- ▸ Do not heat spirits (≥ 15% vol.) when undiluted (e.g. for marinating or pouring over food).
- ▸ Open the appliance door carefully.

The telescopic shelves become hot when the appliance is in use.

- ▸ Allow hot telescopic shelves to cool down before touching them.
- ▸ Only touch hot telescopic shelves with oven gloves.

The inside of the appliance door becomes very hot during operation.

- ▸ Always open the appliance door as far as it will go.
- ▸ Ensure that the appliance door does not swing back.
- ▸ Avoid contact with the inside of the appliance door.

⚠ WARNING – Risk of scalding!

The accessible parts of the appliance become hot during operation.

- ▸ Never touch these hot parts.
- ▸ Keep children at a safe distance.

Hot steam may escape when you open the appliance door. Steam may not be visible, depending on the temperature.

- ▸ Open the appliance door carefully.
- ▸ Keep children at a safe distance.

If there is water in the cooking compartment when it is hot, this may create hot steam.

- ▸ Never pour water into the cooking compartment when the cooking compartment is hot.

⚠ WARNING – Risk of injury!

Scratched glass in the appliance door may develop into a crack.

- ▸ Do not use any harsh or abrasive cleaners or sharp metal scrapers to clean the glass on the oven door, as they may scratch the surface.

The appliance and its parts that can be touched may have sharp edges.

- ▸ Take care when handling and cleaning them.
- ▸ If possible, wear protective gloves.

The hinges on the appliance door move when the door is opened and closed, which could trap your fingers.

- ▸ Keep your hands away from the hinges.

⚠ WARNING – Risk of electric shock!

Incorrect repairs are dangerous.

- ▸ Repairs to the appliance should only be carried out by trained specialist staff.
- ▸ Only use genuine spare parts when repairing the appliance.
- ▸ If the power cord or the appliance power cable of this appliance is damaged, it must be replaced with a special power cord or special appliance power cable, which is available from the manufacturer or its Customer Service.

If the insulation of the power cord is damaged, this is dangerous.

- ▸ Never let the power cord come into contact with hot appliance parts or heat sources.
- ▸ Never let the power cord come into contact with sharp points or edges.
- ▸ Never kink, crush or modify the power cord.

An ingress of moisture can cause an electric shock.

- ▸ Do not use steam- or high-pressure cleaners to clean the appliance.

If the appliance or the power cord is damaged, this is dangerous.
- ▸ Never operate a damaged appliance.
- ▸ Never pull on the power cord to unplug the appliance. Always unplug the appliance at the mains.
- ▸ If the appliance or the power cord is damaged, immediately unplug the power cord or switch off the fuse in the fuse box.
- ▸ Call customer services. → *Page 43*

⚠ WARNING – Risk of suffocation!
Children may put packaging material over their heads or wrap themselves up in it and suffocate.
- ▸ Keep packaging material away from children.
- ▸ Do not let children play with packaging material.

Children may breathe in or swallow small parts, causing them to suffocate.
- ▸ Keep small parts away from children.
- ▸ Do not let children play with small parts.

1.5 Cleaning function

⚠ WARNING – Risk of burns!
⚠ The outside of the appliance gets very hot when the cleaning function is in progress.
- ▸ Never touch the appliance door.
- ▸ Allow the appliance to cool down.
- ▸ Keep children at a safe distance.

Bulbs become very hot when switched on. There is still a risk of burning for some time after they have been switched off.
- ▸ Allow the bulbs to cool down before cleaning the appliance.
- ▸ Keep the lighting switched off for cleaning.

1.6 Halogen bulb

⚠ WARNING – Risk of burns!
The bulbs in the cooking compartment get very hot. There is still a risk of burning for some time after they have been switched off.
- ▸ Do not touch the glass cover.
- ▸ Avoid contact with your skin when cleaning.

Bulbs become very hot when switched on. There is still a risk of burning for some time after they have been switched off.
- ▸ Allow the bulbs to cool down before replacing them.

⚠ WARNING – Risk of electric shock!
When changing the bulb, the bulb socket contacts are live.
- ▸ Before replacing the bulb, ensure that the appliance is switched off in order to prevent a potential electric shock.
- ▸ Also unplug the appliance from the mains or switch off the circuit breaker in the fuse box.

2 Preventing material damage

2.1 General information

ATTENTION!
Objects on the cooking compartment floor will cause heat to build up. The baking and roasting times will no longer be correct and the enamel will be damaged.
- ▸ Do not place anything directly on the cooking compartment floor.
- ▸ Do not cover the cooking compartment floor with any sort of foil or greaseproof paper.

When the cooking compartment is hot, any water inside it will create steam. The change in temperature may cause damage.
- ▸ Never pour water into the cooking compartment when it is still hot.
- ▸ Never place cookware containing water on the cooking compartment floor.

The prolonged presence of moisture in the cooking compartment leads to corrosion.
- ▸ Do not keep moist food in the cooking compartment for a long time with the door closed.
- ▸ Do not store food in the cooking compartment.

Fruit juice dripping from the baking tray leaves stains that cannot be removed.
- ▸ When baking very juicy fruit flans, do not pack too much on the baking tray.
- ▸ If possible, use the deeper universal pan.

If aluminium foil comes into contact with the door pane, it could cause permanent discolouration.
- ▸ Do not allow aluminium foil in the cooking compartment to come into contact with the door pane.

Leaving the appliance to cool down with the door open will damage the front of neighbouring kitchen units over time.
- ▸ Always allow the cooking compartment to cool down with the door closed after cooking at high temperatures.
- ▸ Take care not to trap anything in the appliance door.
- ▸ Only leave the cooking compartment to dry with the door open if a lot of moisture was produced during operation.

If the seal is very dirty, the appliance door will no longer close properly during operation. This may damage the front of adjacent kitchen units.
- ▸ Keep the seal clean at all times.
- ▸ Never operate the appliance if the seal is damaged or missing.

Sitting or placing objects on the appliance door may damage it.
- ▸ Do not place, hang or support objects on the appliance door.
- ▸ Do not place cookware or accessories on the appliance door.

With certain models, accessories may scratch the door pane when closing the appliance door.
- ▸ Always push accessories fully into the cooking compartment.

Carrying the appliance by the door handle could break it. The door handle cannot support the weight of the appliance.
- ▸ Do not carry or hold the appliance by the door handle.

3 Environmental protection and saving energy

3.1 Disposing of packaging

The packaging materials are environmentally compatible and can be recycled.
- ▸ Sort the individual components by type and dispose of them separately.

3.2 Saving energy

If you follow these instructions, your appliance will use less power.

When cooking multiple dishes, do so in succession or in parallel.
- The cooking compartment is heated after cooking the first dish. This reduces the cooking time for the following dishes.

If the cooking time is relatively long, you can switch the appliance off 10 minutes before the cooking time ends.
- There will be enough residual heat to finish cooking the dish.

In hot air mode, you can bake on more than one level at a time.
- This will save energy.

Use dark-coloured, black-coated or enamelled baking tins.
- These types of baking tin absorb the heat particularly well.

Open the appliance door as little as possible during operation.
- This maintains the temperature in the cooking compartment and eliminates the need for the appliance to reheat.

4 Familiarising yourself with your appliance

4.1 Appliance

You can find an overview of the parts of your appliance here.

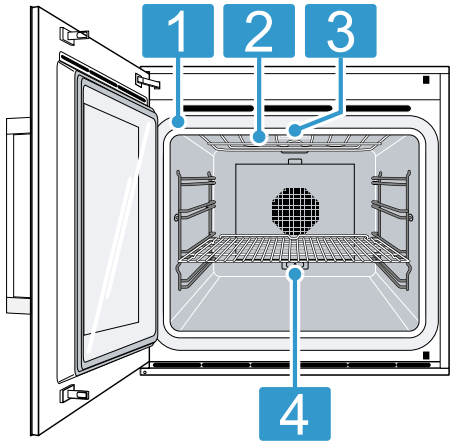

1	Door seal
2	Grill element
3	Interior lighting
4	Connection socket for additional heating element (special accessory for the baking stone and roaster)

4.2 Cooking compartment

The cooking compartment has 4 shelf levels. Count the shelf levels from the bottom up.

⚠ WARNING – Risk of burns!

The inside of the appliance door becomes very hot during operation.

- ▸ Always open the appliance door as far as it will go.
- ▸ Ensure that the appliance door does not swing back.
- ▸ Avoid contact with the inside of the appliance door.

ATTENTION!

Objects on the cooking compartment floor will cause heat to build up. The baking and roasting times will no longer be correct and the enamel will be damaged.

- ▸ Do not place anything directly on the cooking compartment floor.
- ▸ Do not cover the cooking compartment floor with any sort of foil or greaseproof paper.

The accessories may tip.

- ▸ Do not push the accessories between the shelf positions.

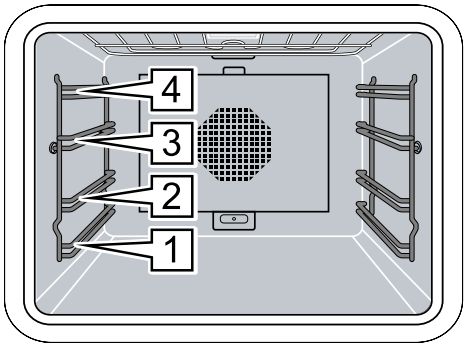

4.3 Controls

You can use the control panel to configure all functions of your appliance and to obtain information about the operating status.
On certain models, specific details such as colour and shape may differ from those pictured.
All appliance types are operated in an identical manner.

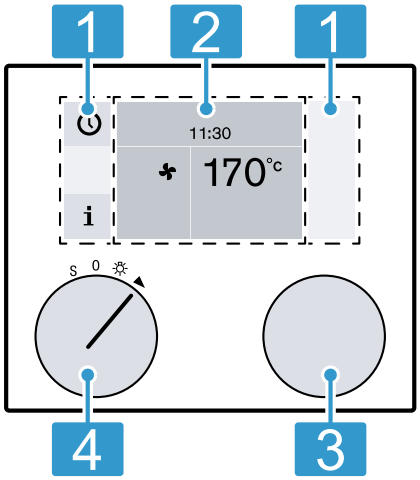

1	**Touch fields**	These areas are touch-sensitive. Touch a symbol to select the corresponding function.
2	**Display**	The display shows current settings and selection options, for example.
3	**Rotary selector**	Use the rotary selector to select the temperature and change additional settings.
4	**Function selector**	Use the function selector to select the type of heating, cleaning or the basic settings.

Symbols

Use the symbols to start or stop functions, or to navigate in the menu.

Symbol	Function
▶	Start
■	Stop
⏸	Pause or end
✕	Cancel
C	Delete
✓	Confirm or save settings
›	Selection arrow
i	Call up additional information
i!	Call up important information and prompts indicating that an action is required
»	Rapid heating with status display
	Calling up individual recipes
rec ●	Record menu
	Edit settings
› A Ä	Enter a name
⌫	Delete letters
	Childproof lock
	Call up the timer menu
	Call up the long-term timer
	Demo mode
	Network connection (Home Connect)

Colours

The different colours are used to guide the user in the relevant setting situations.

Orange	■ Initial settings ■ Main functions
Blue	■ Basic settings ■ Cleaning
White	■ Adjustable values

Appearance

Depending on the situation, the appearance of symbols, values or the entire display changes.

Zoom	The appliance zooms in on the setting that you have just changed. If you have set a time and it is about to run out, it will appear larger on the display just before it runs out, e.g. if you have set the timer.
Pared-down display	After a short while, the appliance reduces the amount of information shown on the display and only the most important information remains. This function is preset. You can change the setting in the basic settings.

Position of the function selector

Use the function selector to select the functions or types of heating.

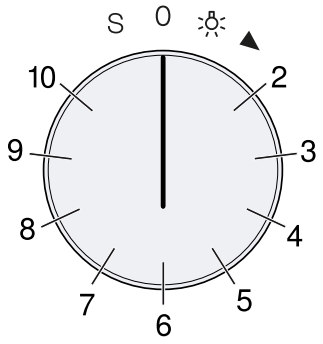

Position	Function/type of heating	Temperature	Application
0	Zero setting		
	Light		Switch on the interior lighting Access to other functions, e.g. automatic programmes, individual recipes, remote start via Home Connect

[1] Type of heating used to determine the energy efficiency class in accordance with EN60350-1.

Position	Function/type of heating	Temperature	Application
2	Hot air	50-300 °C Default temperature 170 °C	Hot air: For cakes, biscuits and bakes on more than one level. The fan in the back wall of the appliance distributes the heat evenly throughout the cooking compartment.
3	Eco hot air[1]	50-300 °C Default temperature 170 °C	Energy-saving hot air mode for cakes, meat, bakes and gratins. Optimal use is made of the residual heat. Convenience functions remain switched off, e.g. the interior lighting. The interior temperature can only be displayed while the appliance is heating up. Do not preheat the appliance. Make sure that the cooking compartment is cold and that there is nothing already in there when you place the food inside. Then start the specified cooking time. Always keep the appliance door closed when cooking. This prevents heat loss.
4	Top + bottom heat	50-300 °C Default temperature 170 °C	For cakes in tins or on a baking tray, bakes, roasts.
5	Top heat	50-300 °C Default temperature 170 °C	Targeted heat from above, for example grilling fruit flan with meringue.
6	Bottom heat	50-300 °C Default temperature 170 °C	For adding extra baking time (such as for moist fruit flans), for boiling down, for dishes in a bain marie.
7	Hot air + bottom heat	50-300 °C Default temperature 170 °C	Additional heat from below for moist cakes, such as fruit flan.
8	Full surface grill + air recirculation	50-300 °C Default temperature 220 °C	Even, all-round heating for meat, poultry and whole fish.
9	Full surface grill	50-300 °C Default temperature 220 °C	For grilling flat pieces of meat, sausages or fillets of fish. Grilling and browning.
10	Baking stone function	50-300 °C Default temperature 250 °C	Can only be used with the baking stone and heating element – these are special accessories. Baking stone heated from below for crisp stone-baked pizza, bread or bread rolls.
S	Basic settings		Adapt the appliance to individual requirements in the basic settings → *Page 17*
S	Catalytic cleaning	300 °C	Self-cleaning

[1] Type of heating used to determine the energy efficiency class in accordance with EN60350-1.

4.4 Standby

The appliance switches to standby mode if no function is set or the childproof lock is activated. The standby screen appears if you do not implement any settings for a long time.
Different displays can be shown in standby mode. The GAGGENAU logo and the time are preset.
In standby mode, the brightness of the control panel is reduced. The brightness of the display depends on the vertical viewing angle. You can change the display and the brightness at any time in the basic settings
→ *Page 17*.
When "Off" is selected for the standby display in the basic settings, you must turn the function selector to exit standby mode.
When the door is open, the interior lighting switches off after a short time.



4.5 Additional information

Press **i** to display additional information, e.g. information about the type of heating that is set or the current cooking compartment temperature.
During continuous operation after heating up, slight temperature fluctuations are normal.
The appliance displays the **i** symbol for important information and indicates that an action is required. The appliance also occasionally displays important information about safety and the operating status automatically. These messages disappear automatically after a few seconds, or press ✔ to confirm the message.
For messages about Home Connect, the appliance also displays the Home Connect status in the **i** symbol.
→ *"Home Connect ", Page 15*

4.6 Cooling fan

The cooling fan switches on when the appliance is in operation. Depending on the appliance version, hot air escapes either over or beneath the door.
After removing your food from the appliance, keep the door closed until the appliance has cooled down. The appliance door must not be left half open as this may damage adjacent kitchen units. The cooling fan continues running for a certain period of time after the appliance has stopped heating and then it switches itself off automatically.
Do not cover the ventilation slots. Otherwise, the appliance will overheat.

4.7 Rapid heating

With the "Rapid heating" function, your appliance reaches the temperature you require particularly quickly in the "top heat", "bottom heat" and "top + bottom heat" types of heating.
To ensure an even cooking result, do not place your food in the cooking compartment until "Rapid heating" is complete and the ⁗ symbol has gone out.
The "Rapid heating" function is set by default in the basic settings. In the basic settings → *Page 17*, you can select ⁗ Rapid heating or ⁀ Heat-up.

4.8 Automatic switch-off

For your protection, the appliance is equipped with an automatic switch-off function. The appliance switches off any heating process after 12 hours if the appliance controls are not used during this time. The display shows a message.
When programming with the long-term timer, the appliance does not activate the automatic switch-off function.

5 Accessories

Use original accessories. These have been made especially for your appliance.

Note: Accessories may become deformed if they get hot. Deformation has no effect on function. As the accessory cools down, it will regain its original shape.

The accessories supplied may differ depending on the appliance model.

Accessories		Use
Baking tray, enamelled	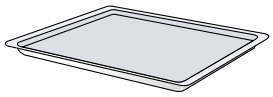	■ Tray bakes ■ Small baked items
Wire rack		■ Cookware ■ Cake tins ■ Ovenproof dishes ■ Roasting
Grill tray, enamelled	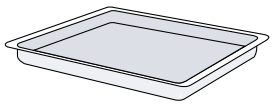	■ Tray bakes ■ Roasting

5.1 Other accessories

You can purchase other accessories from our customer service, specialist retailers or online.
You will find a comprehensive range of products for your appliance in our brochures and online: www.gaggenau.com
Accessories vary from one appliance to another. When purchasing accessories, always quote the exact product number (E no.) of your appliance.
You can find out which accessories are available for your appliance in our online shop or from our customer service.

Other accessories	Order number
Four-piece fully extendable telescopic pull-out rack	BA216102
Wire rack, chrome-plated, without opening, with feet	BA036102
Baking tray, enamelled, 24 mm deep	BA226112
Glass tray	BA046117
Grill tray, enamelled, 37 mm deep	BA226102
Heating element for baking stone, 230 V	BA056115
Baking stone, baking stone supports and pizza paddle	BA056130 **Note:** Order heating element separately
Pizza paddle, 2-part set	BA020002
Oven ceiling with special catalytic enamelling, for retrofitting	00664048
Oven back wall with special catalytic enamelling, for retrofitting	00664248

5.2 Locking function

The locking function prevents the accessories from tilting when they are pulled out.
The accessories must be inserted into the cooking compartment correctly for the tilt protection to work correctly.

5.3 Sliding accessories into the cooking compartment

The accessories have a locking function. The accessories must always be inserted into the cooking compartment the right way round for the tilt protection to work properly.

ATTENTION!

The accessories may tip.

- Do not push the accessories between the shelf positions.

1. When inserting the wire rack, ensure that the lug [a] is facing downwards.

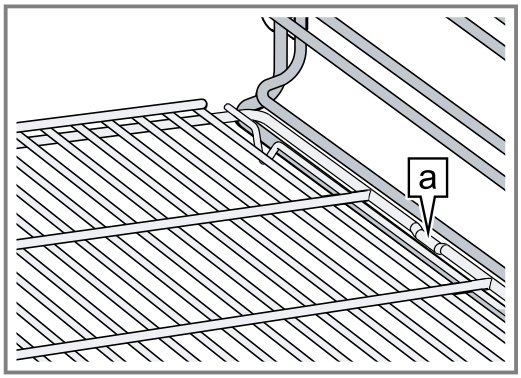

2. Ensure that the safety bar [a] on the wire rack is located at the rear and is facing upwards.

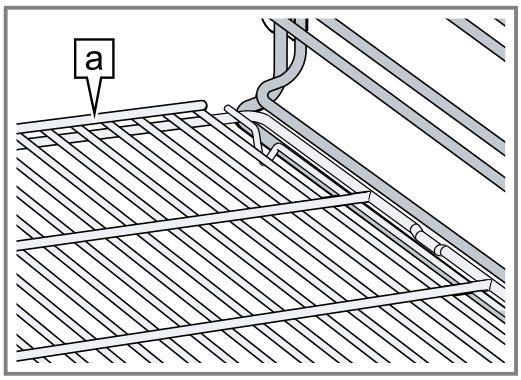

6 Before using for the first time

Configure the settings for initial start-up. Clean the appliance and accessories.

6.1 Initial use

Implement the settings for initial use before using your appliance.
First read the information under safety → *Page 2*.
The appliance must be installed and connected.
After connecting the appliance to the power supply, the GAGGENAU logo appears for approx. 30 seconds and then the appliance displays the "Initial settings" menu.
You can configure your new appliance for initial use.
The "Initial settings" menu appears only after the appliance has been connected to a power supply and switched on for the first time, or if the appliance has not been connected to a power supply for a number of days.
You can change all of the settings in the basic settings → *Page 17*.

Setting the language

Requirement: The display shows the preset language.

1. Use the rotary selector to select the required display language.
2. Press ✔ to confirm.

Setting the time format

Requirement: The display shows the possible formats 24h and AM/PM. 24h is preset.

1. Use the rotary selector to set the required format.
2. Press ✔ to confirm.

Set the time

Requirement: The display shows the time.

1. Use the rotary selector to set the required time.
2. Press ✔ to confirm.

Setting the date format

Requirement: The display shows the possible formats D.M.Y, D/M/Y and M/D/Y. D.M.Y is preset.

1. Use the rotary selector to set the required format.
2. Press ✔ to confirm.

Setting the date

Requirement: The display shows the preset date. The daily setting is already active.

1. Use the rotary selector to set the required day.
2. Press › to switch to the month setting.
3. Use the rotary selector to set the month.
4. Press › to switch to the year setting.
5. Turn the rotary selector to set the year.
6. Press ✔ to confirm.

Setting the temperature unit

Requirement: The display shows the possible units °C and °F. The unit °C is preset.

1. Turn the rotary selector to set the required unit.
2. Press ✔ to confirm.

Ending the initial use

Requirement: The display shows "Initial set-up complete".

- ▸ Press ✔.
- ✔ The appliance switches to standby mode.
- ✔ The display shows the standby screen.
- ✔ The appliance is ready to use.

Heating up the appliance

1. Ensure that there is no leftover packaging in the cooking compartment.
2. To eliminate the new-appliance smell, heat up the empty appliance for an hour at 200 °C in the Hot air type of heating ✣ with the door closed.

Cleaning accessories

- ▸ Before first use, clean the accessories thoroughly using hot soapy water and a soft cloth.

7 Basic operation

7.1 Activating the appliance

1. To exit standby mode, open the door and turn the function selector or touch a touch field.
2. Set the required function.

7.2 Switching on the appliance

1. Use the function selector to set the required type of heating.
- ✔ The display shows the selected type of heating and the suggested temperature.
2. If required, use the rotary selector to set the desired temperature.
- ✔ The display shows the heating symbol ».
- ✔ The bar displays the current heating status.
- ✔ Once the appliance reaches the set temperature, a signal tone sounds and the heating symbol goes out ».

Note: If the temperature is set to less than 70 °C, the cooking compartment light will remain switched off.

7.3 Switching off the appliance

- ▸ Turn the function selector to 0.

7.4 Switching on the appliance after automatic switch-off

Requirement: After prolonged operation, the → *"Automatic switch-off", Page 9* switches off the appliance.

1. Turn the function selector to 0.
2. Switch the appliance back on again.

8 Timer functions

Your appliance has different timer functions, with which you can control its operation.

8.1 Overview of the timer functions

Use ⏲ to select the different timer functions.

Timer function	Use
⧖	Short-term timer
◔	Cooking time[1]
⏲	Cooking time end[1]
⏱	Stopwatch

[1] Not available in standby mode.

8.2 Calling up the timer menu

Note: You can call up the timer menu from any operating mode. The timer menu is not available if you turn the function selector to S in the basic settings.

- ▸ Press ⏲.
- ✔ The display shows the timer menu.

8.3 Exiting the timer menu

- ▸ Press **X**.
- ✔ The timer menu is closed.
- ✔ Any settings that are not saved are lost.

Note: You can exit the timer menu at any time.

8.4 Short-term timer

The short-term timer runs independently of the other appliance settings. You can enter a maximum of 90 minutes.

Setting the short-term timer

1. Press ⏲.
- ✔ The display shows the "Short-term timer" ⧖ function.
2. Use the rotary selector to set the required cooking time.
3. Press ▶ to start.
- ✔ The appliance closes the timer menu.
- ✔ The time counts down.
- ✔ The display shows ⧖ and the time that has elapsed.
- ✔ A signal tone sounds once the time has elapsed.
4. Press ✔.
- ✔ The signal tone stops.

Stopping the short-term timer

1. Press ⏲.
2. Touch ❯ to select the "Short-term timer" ⧖ function.
3. Press **II**.
- ✔ The short-term timer stops.
- ✔ The display shows ▶.
4. To allow the timer to continue counting down, touch ▶.

Switching off the timer early

1. Press ⏲.
2. Touch ❯ to select the "Short-term timer" ⧖ function.
3. Press **C**.

8.5 Stopwatch

The stopwatch runs independently of the other appliance settings. The stopwatch counts from 0 seconds up to 90 minutes.
The stopwatch has a pause function. This allows you to stop the stopwatch from time to time.

Starting the stopwatch

1. Press ⏲.
2. Use ❯ to select the "Stopwatch" ⏱" function.
3. Press ▶ to start.
- ✔ The appliance closes the timer menu.
- ✔ The time counts down.
- ✔ The display shows ⏱ and the time that has elapsed.

Stopping the stopwatch

1. Press ⏲.
2. Use ❯ to select the "Stopwatch" ⏱" function.
3. Press **II**.
- ✔ The time stops.
- ✔ The display shows ▶.
4. To continue to run the stopwatch, press ▶.
- ✔ The time continues to run.
- ✔ Once it has reached 90 minutes, the display flashes and a signal tone sounds.
5. Press ✔.
- ✔ The signal tone stops.

Switching off the stopwatch

1. Press ⏲.
2. Use ❯ to select the "Stopwatch" ⏱" function.
3. Press **C**.

8.6 Cooking time

When you set the cooking time for your food, the appliance automatically switches off after this time. You can set a cooking time of between 1 minute and 23:59 hours.
You can change the type of heating and temperature while the cooking time counts down.

Setting the cooking time

Requirements

- The food is in the cooking compartment.
- You have set the type of heating and the temperature.

1. Press ⏲.
2. Use ❯ to select the "Cooking time" ◔ function.
3. Use the rotary selector to set the required cooking time.
4. Press ▶ to start.
- ✔ The appliance starts the cooking time.
- ✔ The appliance closes the timer menu.
- ✔ The display shows the temperature, the operating mode, the remaining cooking time and the cooking time end.
- ✔ One minute before the end of the cooking time, the display zooms in on the cooking time.
- ✔ Once the cooking time has elapsed, the appliance switches off.
- ✔ ◔ flashes and a signal tone sounds.

5. Press ✔, open the appliance door or set the function selector to 0.

✔ The signal tone stops.

Changing the cooking time

1. Press ⏲.
2. Use › to select the "Cooking time" ◔ function.
3. Use the rotary selector to change the cooking time.
4. Press ▶ to start.

Deleting the cooking time

1. Press ⏲.
2. Use › to select the "Cooking time" ◔ function.
3. Use C to cancel the cooking time.
4. Use ✖ to return to normal operation.

Cancelling the entire procedure

▸ Turn the function selector to 0.

8.7 Cooking time end

You can move the cooking time end to a later time. Example: It is 14:00. The dish requires a cooking time of 40 minutes. You want the meal to be ready at 15:30. Enter the cooking time of 40 minutes and delay the cooking-time end until 15:30. The electronics system calculates the start time. The appliance starts automatically at 14:50 and switches off at 15:30.
Bear in mind that food which spoils easily should not be left in the appliance for too long.

Delaying the cooking time end

Requirements

- The food is in the cooking compartment.
- You have set the type of heating, temperature and cooking time.

1. Press ⏲.
2. Use › to select the "Cooking time end" ⏲ function.
3. Use the rotary selector to set the required cooking time end.
   If ◔ flashes, set the cooking time first.
4. Press ▶ to start.

✔ The appliance switches to standby.
✔ The display shows the operating mode, temperature, cooking time and cooking time end.
✔ The appliance starts at the calculated time and automatically switches off once the cooking time has elapsed.
✔ After the cooking time has elapsed, ⏲ flashes and a signal tone sounds.

5. Press ✔, open the appliance door or set the function selector to 0.

✔ The signal tone stops.

Changing the cooking time end

1. Press ⏲.
2. Use › to select the "Cooking time end" ⏲ function.
3. Use the rotary selector to set the required cooking-time end.
4. Press ▶ to start.

Cancelling the entire procedure

▸ Turn the function selector to 0.

9 Long-term timer

With the appliance in hot air mode, this function keeps the temperature between 50 °C and 230 °C.
You can keep food warm for up to 74 hours without having to switch the appliance on or off.
Bear in mind that food which spoils easily should not be left in the appliance for too long.

9.1 Starting the long-term timer

Requirement: The long-term timer is set to "Available" in the basic settings → *Page 17*.

1. Turn the function selector to ☼.
2. Press ⏲.

✔ The display shows the default value 24h at 85 °C.

3. Press ⏲ and use the rotary selector to set the required cooking time.
4. Press › and use the rotary selector to set the required cooking time end.
5. Press ›, use the rotary selector to set the required switch-off date, and press ✔ to confirm.
6. Use the rotary selector to set the desired temperature.
7. Press ▶ to start.

✔ The appliance starts the long-term timer.
✔ The display shows ⏲ and the temperature.
✔ The interior lighting and the display lighting are switched off.
✔ The control panel is locked.
✔ If you touch the control panel, no signal tone sounds.
✔ Once the time has elapsed, the appliance no longer heats up and the display goes out.

8. Turn the function selector to 0.

9.2 Switching off the long-term timer

▸ Turn the function selector to 0.

10 Childproof lock

Activate the childproof lock so that children cannot accidentally switch the appliance on or change the settings.
If the childproof lock is switched on and the power fails, the childproof lock can be deactivated when the power comes back on.

10.1 Activating the childproof lock

Requirements
- You can set the childproof lock to "available" in the basic settings → *Page 17*.
- The function selector is set to 0.

- ▸ Press and hold 🔒 for approx. 6 seconds.
- ✔ The display shows the standby screen and 🔒.
- ✔ The childproof lock is activated.

10.2 Deactivating the childproof lock

Requirement: The function selector is set to 0.

1. Press and hold 🔓 for approx. 6 seconds.
- ✔ The childproof lock is deactivated.
2. Set the appliance as normal.

11 Individual recipes

You have the option to save up to 50 individual recipes with a name so that, if required, you can access the recipe quickly and easily. You can record a recipe.

11.1 Recording a recipe

It is possible to set and record up to 5 phases consecutively.

1. Turn the function selector to ☼.
2. Press 🍳.
3. Use the rotary selector to select "Individual recipes".
4. Press ✔ to confirm.
5. Use the rotary selector to select a free memory location.
6. Press rec ●.
7. Use the function selector to set the required type of heating and the rotary selector to set the required temperature.
- ✔ The appliance records the cooking time.
8. Insert the core temperature probe into the socket in the cooking compartment and enter the core temperature for a phase.
9. To record another phase, set the function selector to the required type of heating and use the rotary selector to set the required temperature.
- ✔ A new phase starts.
10. When the dish has reached the required cooking result, press ■.
11. Enter the name under "ABC".
    → *"Entering a name", Page 14*
    The appliance only starts recording a phase once it has reached the set temperature.
    Each phase must last at least one minute.
    During the first minute of a phase, you can change the type of heating or the temperature.

11.2 Programming a recipe

1. Turn the function selector to ☼.
2. Press 🍳.
3. Use the rotary selector to select "Individual recipes" and press ✔ to confirm.
4. Use the rotary selector to select a free memory location.
5. Press 🌡.
6. Enter the name under "ABC".
    → *"Entering a name", Page 14*
7. Use › to select the first phase.
- ✔ The display shows the type of heating and temperature that are selected at the start.
8. If required, use the rotary selector to change the type of heating and the temperature.
9. Insert the core temperature probe into the socket in the cooking compartment and enter the core temperature for a phase or select the time setting using ›.
    You cannot enter the cooking time for phases with a programmed core temperature.
10. Use the rotary selector to set the required cooking time.
11. If the preparation is complete, use ✘ to finish making entries or use › to select the next phase.
12. Use ✔ to save or ✘ to cancel, and exit the menu.

11.3 Entering a name

1. Enter a name for the recipe under "ABC".
2. Use the rotary selector to select the letters.
    A new word always begins with a capital letter.
    Latin characters, certain special characters and numbers are available.
3. Briefly press ›A Ä to position the cursor to the right.
4. Press and hold ›A Ä to switch to umlauts and special characters.
5. Press ›A Ä twice to insert a break.
6. Briefly press ›Ä to position the cursor to the right.
7. Press and hold ›Ä to switch to normal characters.
8. Press ›Ä twice to insert a break.
9. Press ⌫ to delete a letter.
10. Use ✔ to save or ✘ to cancel, and exit the menu.

11.4 Starting a recipe

1. Turn the function selector to ☼.
2. Press 🍳.
3. Use the rotary selector to select "Individual recipes" and press ✔ to confirm.
4. Use the rotary selector to select the desired recipe.
5. Press ▸ to start.
    The cooking time does not start counting down until the appliance has reached the set temperature.

You can use the rotary selector to change the temperature while the recipe is in progress. Changing the temperature does not change the saved recipe.

✔ The operation begins.
✔ You can see the cooking time counting down.
✔ The display shows the settings for the phases on the display bar.

11.5 Changing a recipe

You can change the settings for a recorded or programmed recipe.

1. Turn the function selector to ☼.
2. Press .
3. Use the rotary selector to select "Individual recipes" and press ✔ to confirm.
4. Use the rotary selector to select the desired recipe.
5. Press .
6. Use › to select the required phase.

✔ The display shows the programmed type of heating, temperature and cooking time.

7. If required, you can use the rotary selector or function selector to change the settings.
8. Use ✔ to save or ✘ to cancel, and exit the menu.

11.6 Deleting a recipe

1. Turn the function selector to ☼.
2. Press .
3. Use the rotary selector to select "Individual recipes" and press ✔ to confirm.
4. Use the rotary selector to select the desired recipe.
5. Use C to delete the recipe.
6. Press ✔ to confirm.

12 Home Connect

This appliance is network-capable. Connecting your appliance to a mobile device lets you control its functions via the Home Connect app, adjust its basic settings and monitor its operating status.
The Home Connect services are not available in every country. The availability of the Home Connect function depends on the availability of Home Connect services in your country. You can find information about this at: www.home-connect.com.
The Home Connect app guides you through the entire login process. Follow the instructions in the Home Connect app to configure the settings.

Tips

- Please consult the documents supplied by Home Connect.
- Please also follow the instructions in the Home Connect app.

Notes

- Please note the safety precautions in this instruction manual and make sure that they are also observed when operating the appliance via the Home Connect app.
  → *"Safety", Page 2*
- If you want to operate the appliance via the Home Connect app, you must activate the remote control function in the Home Connect settings first. This function is for your own safety. Turn the function selector on the appliance to the light position ☼ to enable the remote control function.
- Operating the appliance on the appliance itself always takes priority. During this time it is not possible to operate the appliance using the Home Connect app.
- In networked standby mode, the appliance requires a maximum of 2 W.

12.1 Setting up Home Connect

Requirements

- The appliance is connected to the power supply and is switched on.
- You have a mobile device with a current version of the iOS or Android operating system, e.g. a smartphone.
- The mobile device and the appliance are within range of your home network's Wi-Fi signal.

1. Download the Home Connect app.

GET IT ON Google Play

Download on the App Store

2. Open the Home Connect app and scan the following QR code.
3. Follow the instructions in the Home Connect app.

12.2 Home Connect settings

You can adjust the Home Connect settings and network settings in your appliance's basic settings.
Which settings the display shows will depend on whether Home Connect has been set up and whether the appliance is connected to your home network.

Symbol	Basic setting	Possible settings	Explanation
LAN / WLAN	Connection type	LAN Wi-Fi	You can switch between connection types (LAN cable and Wi-Fi). Follow the instructions for setting up the relevant connection type.
	Connection	Connect Disconnect	You can switch the network connection on or off as required. The network information is retained after the appliance is switched off. After switching on the appliance, wait for a few seconds until it reconnects to the network. **Note:** In networked standby mode, the appliance requires a maximum of 2 W.
	Connect to app		Start the connection process between the app and the appliance.
	Software update		As soon as a new software version is available, a message appears on the display. In the Home Connect menu, you can install the new software using .
	Remote control	Activate Deactivate	You can use the Home Connect app to access the appliance's functions. If the remote control has been deactivated, only the appliance's operating statuses are displayed in the app. The remote control is only available if you set the rotary selector to light position . The light goes out after a few minutes.
	Permanent remote start	Activate Deactivate	When permanent remote start is activated, you can start and operate your appliance at any time without prior approval on the appliance. Permanent remote start is only available if you set the rotary selector to light position . The light goes out after a few minutes.
	Delete network settings		You can delete all network settings from the appliance at any time.
	Appliance information		The display shows: ■ MAC address COM module ■ Appliance serial number ■ Software version Depending on the connection type, you can view more information, such as the SSID network name, by touching the arrow button.

12.3 Operating the appliance with the Home Connect app

You can use the Home Connect app to set and start the appliance remotely.

⚠ WARNING – Risk of fire!

Combustible objects that are left in the cooking compartment may catch fire.

- ▸ Never store combustible objects in the cooking compartment.
- ▸ If smoke is emitted, the appliance must be switched off or the plug must be pulled out and the door must be held closed in order to stifle any flames.

Requirements

- ■ The appliance is switched on.
- ■ The appliance is connected to the home network and to the Home Connect app.
- ■ In order to be able to set the appliance via the app, the manual or permanent remote start must be selected in the "Remote Control Level" basic setting.

1. Set the function selector to .
2. To activate the remote start, press .

✔ appears beside **i**.

3. Configure a setting in the Home Connect app and send it to the appliance.

Notes

- ■ If you open the appliance door within 15 minutes of activating remote start or of the operation ending, the manual remote start is deactivated.
- ■ When you start the oven using the controls on the appliance itself, the remote start function is activated automatically. You can use the Home Connect app to adjust the settings or start a new programme.

12.4 Software update

Your appliance's software can be updated using the software update function, e.g. for the purposes of optimisation, troubleshooting or security updates.
To do this, you must be a registered Home Connect user, have installed the app on your mobile device and be connected to the Home Connect server.
As soon as a software update is available, you will be informed via the Home Connect app and will be able to start the software update via the app. Once the update has been successfully downloaded, you can start in-

stalling it via the Home Connect app if you are in your home network (Wi-Fi). The Home Connect app informs you once installation is successful.

Notes

- The software update consists of two steps.
  - The first step is the download.
  - The second step is the installation on your appliance.
- You can continue to use your appliance as normal while updates are downloading. Depending on your personal settings in the app, software updates can also be set to download automatically.
- Installation takes a few minutes. You cannot use your appliance during installation.
- We recommend that you install security updates as soon as possible.

12.5 Remote diagnostics

Customer Service can use Remote Diagnostics to access your appliance if you contact them, have your appliance connected to the Home Connect server and if Remote Diagnostics is available in the country in which you are using the appliance.

Tip: For further information and details about the availability of Remote Diagnostics in your country, please visit the service/support section of your local website: www.home-connect.com.

12.6 Data protection

Please see the information on data protection.
The first time your appliance is registered on a home network connected to the Internet, your appliance will transmit the following types of data to the Home Connect server (initial registration):

- Unique appliance identification (consisting of appliance codes as well as the MAC address of the Wi-Fi communication module installed).
- Security certificate of the Wi-Fi communication module (to ensure a secure data connection).
- The current software and hardware version of your appliance.
- Status of any previous reset to factory settings.

This initial registration prepares the Home Connect functions for use and is only required when you want to use the Home Connect functions for the first time.

Note: Please note that the Home Connect functions can only be utilised with the Home Connect app. Information on data protection can be retrieved in the Home Connect app.

13 Basic settings

You can configure the basic settings for your appliance to meet your needs.

13.1 Overview of the basic settings

Here you can find an overview of the basic settings and factory settings. The basic settings depend on the features of your appliance.

Display	Basic setting	Selection	Description
	Brightness	Levels 1, 2, 3, 4, 5[1], 6, 7, 8	Set the display brightness.
	Standby screen	On[1] Off ■ Clock ■ Clock + GAGGENAU logo[1] ■ Date ■ Date + GAGGENAU logo ■ Clock + date ■ Clock + date + GAGGENAUlogo	Appearance of the standby screen Off: No display. You can use this setting to reduce the standby energy consumption of your appliance. On: Multiple screens can be adjusted. Press ✔ to confirm "On" and use the rotary selector to select the required screen.
	Display screen	Reduced[1] Standard	"Reduced": After a short time, the display shows only the most important information.
	Touch field colour	Grey[1] White	Select the colour of the symbols on the touch fields.
	Touch field tone type	Tone 1[1] Tone 2 Off	Press a touch field to select a signal tone.
	Touch field tone volume	Levels 1, 2, 3, 4, 5[1], 6, 7, 8	Set the volume of the touch field tone.

[1] Factory setting (may vary according to model)

Display	Basic setting	Selection	Description
	Rapid heating	On[1] Off	During rapid heating, the cooking compartment reaches the required temperature particularly quickly.
	Heating up signal	On[1] Off	The signal tone sounds when the appliance reaches the required temperature when heating up.
	Signal volume	Levels 1, 2, 3, 4, 5[1], 6, 7, 8	Set the volume of the signal tone.
	Time format	AM/PM 24h[1]	Set the 24-hour format set or 12-hour format.
	Time	Current time	Set the time.
	Clock change	Manual[1] Automatic	Automatic conversion of the time when changing from summer time to winter time.
	Date format	D.M.Y[1] D/M/Y M/D/Y	Set the date format.
	Date	Current date	Set the date. Press › to switch between the year, month and day.
	Temperature unit	°C[1] °F	Set the temperature unit.
	Weight unit	kg[1] oz.	Set the weight unit.
	Language	German[1] French [...] English	Set the language for the text display. The system restarts when you change the language. The restart takes a few seconds. After restarting, the appliance closes the basic settings menu.
	Factory settings	Restoring the appliance to the factory settings	The question: "Delete all individual settings made and reset to factory settings?" must be confirmed with ✓ or cancelled with ✗. When restoring factory settings, the appliance will delete individual recipes. After restoring factory settings, the "Initial settings" menu is displayed.
	Demo mode	On[1] Off	The demo mode is used for demonstration purposes only. The appliance does not heat up in demo mode. All other functions are available. The "Off" setting must be activated for normal operation. The setting is only possible in the first 3 minutes after connecting the appliance.
	Long-term timer	Not available[1] Available	Available: You can set the long-term timer → *Page 13*.
	Childproof lock	Not available[1] Available	Available: You can activate the childproof lock → *Page 14*.
	Home network	LAN / WLAN Connection type Connection Connect to app Software update Remote control Permanent remote start Delete network settings Appliance info	Select settings for the connection to the home network and mobile devices. The display shows different setting options depending on the connection status.

[1] Factory setting (may vary according to model)

13.2 Changing the basic settings

1. Turn the function selector to S.
2. Use the rotary selector to select "Basic settings".
3. Press ✔.
4. Use the rotary selector to select the required basic setting.
5. Press _.
6. Use the rotary selector to set the basic setting.
7. Press ✔ to save, or press ✘ to cancel and exit the current basic setting.
8. Turn the function selector to 0 to exit the basic settings menu.

✔ The changes are saved.

14 Cleaning and servicing

To keep your appliance working efficiently for a long time, it is important to clean and maintain it carefully.

14.1 Cleaning agents

To avoid damaging the various surfaces on the appliance, do not use any unsuitable cleaning agents.

⚠ WARNING – Risk of electric shock!

An ingress of moisture can cause an electric shock.

- ▸ Do not use steam- or high-pressure cleaners to clean the appliance.

⚠ WARNING – Risk of burns!

The appliance and its parts that can be touched become hot during use.

- ▸ Caution should be exercised here in order to avoid touching heating elements.
- ▸ Young children under 8 years of age must be kept away from the appliance.

Bulbs become very hot when switched on. There is still a risk of burning for some time after they have been switched off.

- ▸ Allow the bulbs to cool down before cleaning the appliance.
- ▸ Keep the lighting switched off for cleaning.

⚠ WARNING – Risk of injury!

Scratched glass in the appliance door may develop into a crack.

- ▸ Do not use any harsh or abrasive cleaners or sharp metal scrapers to clean the glass on the appliance door, as they may scratch the surface.

ATTENTION!

Unsuitable cleaning agents damage the surfaces of the appliance.

- ▸ Do not use harsh or abrasive cleaning products.
- ▸ Do not use cleaning products with a high alcohol content.
- ▸ Do not use hard scouring pads or cleaning sponges.
- ▸ Do not use any special cleaners for cleaning the appliance while it is hot.

Salt contained in new sponge cloths may damage surfaces.

- ▸ Wash new sponge cloths thoroughly before use.

Using oven cleaner in a hot cooking compartment damages the stainless steel surfaces.

- ▸ Never use oven cleaner in the cooking compartment when it is still warm.
- ▸ Remove all food remnants from the cooking compartment and the appliance door before you next heat up the appliance.

Suitable cleaning agents

Only use cleaning agents that are suitable for the different surfaces on your appliance.

Appliance door

Area	Suitable cleaning agents	Information
Door panel	■ Glass cleaner	Do not use a glass scraper. Clean with a window cloth or a microfibre cloth.
Door seal	■ Hot soapy water	Clean with a dishcloth. Do not remove or scrub. Do not use metal scrapers or glass scrapers for cleaning.
Display	■ Soapy water	Wipe down using a microfibre cloth or a slightly damp cloth. Do not wipe with a wet cloth

Cooking compartment

Area	Suitable cleaning agents	Information
Cooking compartment	■ Hot soapy water	Clean with a dishcloth and dry with a soft cloth.

Area	Suitable cleaning agents	Information
Very dirty cooking compartment	■ Cleaning gel spray for ovens	The cleaning gel spray for ovens can be obtained from customer service or from the online shop. Observe the following information about the cleaning gel spray: ■ The cleaning gel spray must not get into the door opening. ■ Leave this to work for no more than 12 hours. ■ Do not use it on hot surfaces. ■ Rinse off thoroughly with water. ■ Follow the manufacturer's instructions.
Glass cover for the cooking compartment light	■ Hot soapy water	Clean with a dishcloth.
Shelf supports	■ Hot soapy water	**Note:** If required, remove the shelf supports for cleaning. → *"Removing the shelf supports", Page 20* In the event of heavy soiling, leave to soak and use a brush.
Accessories	■ Hot soapy water	Soak burnt-on residues and remove with a brush. Rinse thoroughly with clean water.
Fully extendable telescopic pull-out rack (special accessory)	■ Hot soapy water	Clean with a dishcloth or scrubbing brush and dry with a soft cloth.
Baking stone (special accessory)	■ Brush	Remove burnt-on residues with a brush. Never clean the baking stone with water.

14.2 Microfibre cloth

The honeycomb microfibre cloth is especially suitable for cleaning easily damaged surfaces, such as glass, glass ceramic, stainless steel or aluminium. The microfibre cloth removes liquid and greasy deposits in one go.
The microfibre cloth can be obtained from customer service or from the online shop.

14.3 Removing the shelf supports

1. Place a tea towel in the cooking compartment to protect the cooking compartment floor from scratches.
2. Lift the shelf support upwards at the front and ① unhook it ②.

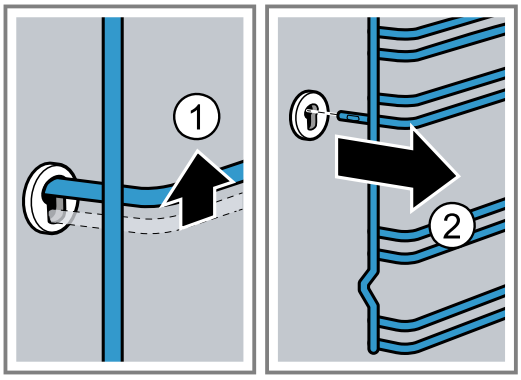

3. Pull the shelf support to the front ① and remove it ② .

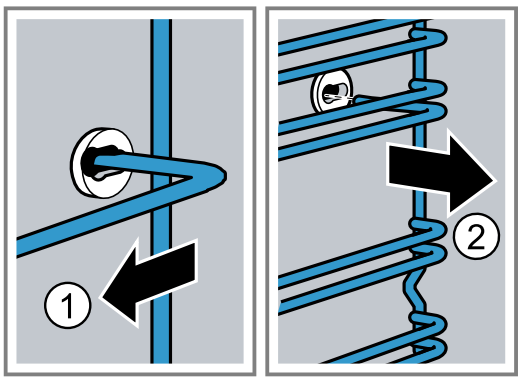

4. Clean the shelf supports with washing-up liquid and a sponge.
   – Use a scrubbing brush to remove stubborn dirt deposits.

14.4 Fitting the shelf supports

Note: The shelf supports are identical and fit both the left and right sides.

1. Position the shelf support such that the indentation is located at the bottom.

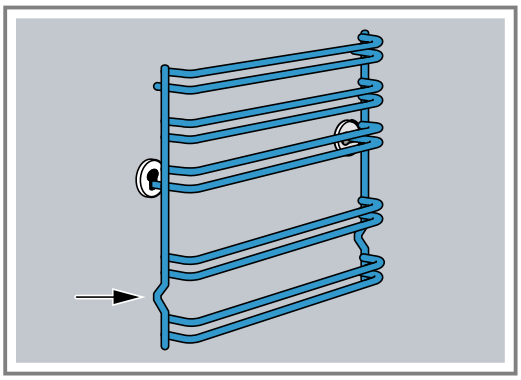

2. First insert the shelf support into the rear socket ① and then push it to the back slightly ②.

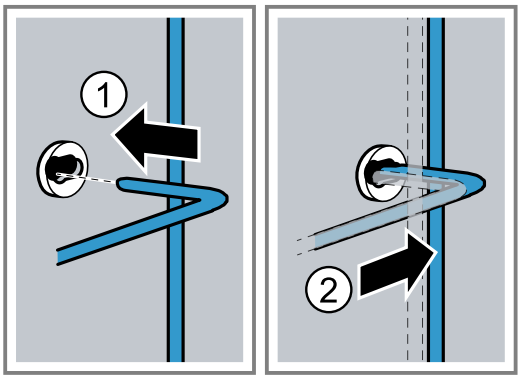

3. Hook the shelf support into the front socket.

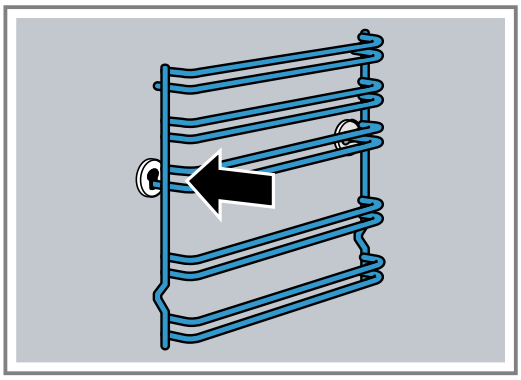

14.5 Cleaning the fully extendable telescopic pull-out rack

ATTENTION!

Aggressive cleaners cause damage to the fully extendable telescopic pull-out rack.

- ▸ Do not clean the fully extendable telescopic pull-out rack in the dishwasher.
- ▸ Do not place the fully extendable telescopic pull-out rack in rinsing water.

1. Remove the fully extendable telescopic pull-out rack.
2. Undo the knurled nut.
3. Use a damp cloth to clean the pull-out rail.
   – Do not remove the lubricant on the pull-out rail. It is best to clean the pull-out rail while it is pushed in.

15 Catalytic cleaning

The catalytic cleaning function eliminates dirt at high temperatures.

⚠ **WARNING – Risk of burns!**

⚠ The outside of the appliance gets very hot when the cleaning function is in progress.

- ▸ Never touch the appliance door.
- ▸ Allow the appliance to cool down.
- ▸ Keep children at a safe distance.

For catalytic cleaning, your cooking compartment requires an oven ceiling and an oven back wall that are coated with a special catalytic enamelling. You can obtain the oven ceiling and the oven back wall with special catalytic enamelling from customer service or from the online shop.

The non-catalytic parts such as the cooking compartment floor, the side walls, the inside of the door and the glass pane are not cleaned during catalytic cleaning.

You can delay the catalytic cleaning switch-off time, e.g. if you want the catalytic cleaning to run during the night.

15.1 Preparing the catalytic cleaning function

1. Remove coarse dirt and food residues from the cooking compartment.
2. Clean the door seals, the inside of the door and the glass pane by hand as these parts are not cleaned during the catalytic cleaning cycle.
3. Remove all accessories from the cooking compartment.
4. Remove any loose parts from inside the cooking compartment.
   – Ensure that nothing is left inside the cooking compartment.
5. Close the appliance door.

15.2 Starting the catalytic cleaning function

1. Turn the function selector to S.

✔ ⁺ lights up.

2. Press ✔ to confirm.

✔ The display shows the switch-off time at which the catalytic cleaning function will be finished.

3. If required, you can use the rotary selector to delay the switch-off time.
4. Press ✔ to confirm.
5. Press ▶ to start.
   The total duration of the catalytic cleaning function comprises the cleaning time and cooling period. The relevant section of catalytic cleaning time counts down on the display.

✔ The cleaning time counts down on the display.

- ✔ If you have delayed the switch-off time, the time until the catalytic cleaning function starts counts down in the display.
- ✔ The light in the cooking compartment remains switched off.
- ✔ A signal tone sounds once the catalytic cleaning function has ended.
- ✔ The display shows a message.

6. Allow the appliance to cool down.

16 Troubleshooting

You can rectify minor faults on your appliance yourself. Read the troubleshooting information before contacting after-sales service. This will avoid unnecessary costs.

⚠ **WARNING – Risk of injury!**
Improper repairs are dangerous.
- ▸ Repairs to the appliance should only be carried out by trained specialist staff.
- ▸ If the appliance is defective, call Customer Service.

⚠ **WARNING – Risk of electric shock!**
Incorrect repairs are dangerous.
- ▸ Repairs to the appliance should only be carried out by trained specialist staff.
- ▸ Only use genuine spare parts when repairing the appliance.
- ▸ If the power cord or the appliance power cable of this appliance is damaged, it must be replaced with a special power cord or special appliance power cable, which is available from the manufacturer or its Customer Service.

16.1 Malfunctions

Fault	Cause and troubleshooting
The appliance is not working.	The mains plug of the power cord is not plugged in. ▸ Connect the appliance to the power supply.
	The circuit breaker in the fuse box has tripped. ▸ Check the circuit breaker in the fuse box.
	There has been a power cut. ▸ Check whether the lighting in your room or other appliances are working.
	Operating error. ▸ Switch off the circuit-breaker for the appliance in the fuse box and switch it back on after approx. 60 seconds.
The appliance does not start.	The appliance door is not fully closed. ▸ Close the appliance door.
The appliance does not work. The display does not respond. The display shows the symbol for the childproof lock 🔒.	Childproof lock is activated. ▸ Deactivate the childproof lock. → *Page 14*
The appliance automatically switches off.	Safety switch-off function: No operation for more than 12 hours. 1. Press ✔ to confirm the message. 2. Switch off the appliance.
The appliance does not heat up; the display shows the symbol for demo mode .	The appliance is in demo mode. ▸ Deactivate the demo mode in the basic settings → *Page 17*.
The display shows the error message "Exx".	An error occurred. 1. If the display shows an error message, turn the function selector to 0. ✔ If the display no longer shows the error message, it was a one-off problem. 2. If the display continues to show or repeatedly shows the error message, contact customer service → *Page 43* and provide them with the error code.

16.2 Power failure

Your appliance can bridge a power failure of a few seconds. The operation continues.
If the power failure lasts longer and the appliance was operating, the display shows a message. The operation is interrupted.

Switch the appliance back on again after a power failure

1. Turn the function selector to 0.
2. Switch the appliance back on again as usual.

16.3 Demo mode

If the display shows , demo mode is activated. The appliance does not heat up.

Deactivate demo mode

1. To briefly disconnect the appliance from the mains, switch off the household fuse or the circuit breaker in the fuse box.
2. Deactivate demo mode within 3 minutes in the basic settings → *Page 17*.

16.4 Replacing the oven light bulb

⚠ WARNING – Risk of burns!
The appliance and its parts that can be touched become hot during use.
- ▸ Caution should be exercised here in order to avoid touching heating elements.
- ▸ Young children under 8 years of age must be kept away from the appliance.

⚠ WARNING – Risk of electric shock!
When changing the bulb, the bulb socket contacts are live.
- ▸ Before replacing the bulb, ensure that the appliance is switched off in order to prevent a potential electric shock.
- ▸ Also unplug the appliance from the mains or switch off the circuit breaker in the fuse box.

Note: Heat-resistant, 230 V, 60-watt, G9 halogen bulbs are available from customer service or specialist retailers. Only use these bulbs. Hold the new halogen bulbs only with a clean, dry towel. This increases the service life of the bulb.

Requirements
- The appliance is disconnected from the power supply.
- The cooking compartment has cooled down.
- You have a new halogen bulb to replace the old one.

1. Place a tea towel in the cooking compartment to prevent damage.
2. Undo the screw on the lamp cover.
✔ The lamp cover hinges down.
3. Pull out the halogen bulb.
4. Insert the new halogen bulb and press it firmly into the socket.
5. Hinge up the lamp cover and screw tightly.
6. Remove the tea towel from the cooking compartment.
7. Connect the appliance to the power supply.

16.5 Replacing the lamp cover

If the bulb cover in the cooking compartment is damaged, replace the bulb cover. You can purchase the lamp cover from customer service by specifying the E number and FD number of your appliance.

Requirements
- The appliance is disconnected from the power supply.
- The cooking compartment has cooled down.

1. Place a tea towel in the cooking compartment to prevent damage.
2. Undo the screw on the lamp cover.
✔ The lamp cover hinges down.
3. Hinge up the new lamp cover and screw tightly.
4. Remove the tea towel from the cooking compartment.
5. Connect the appliance to the power supply.

17 Disposal

17.1 Disposing of old appliance

Valuable raw materials can be reused by recycling.
1. Unplug the appliance from the mains.
2. Cut through the power cord.
3. Dispose of the appliance in an environmentally friendly manner.
   Information about current disposal methods are available from your specialist dealer or local authority.



This appliance is labelled in accordance with European Directive 2012/19/EU concerning used electrical and electronic appliances (waste electrical and electronic equipment - WEEE).
The guideline determines the framework for the return and recycling of used appliances as applicable throughout the EU.

18 How it works

Here, you can find the ideal settings for various types of food as well as the best accessories and cookware. We have perfectly tailored these recommendations to your appliance.

18.1 General cooking tips

Take note of the following information when cooking all types of food.

- Always preheat the appliance. This will produce the best cooking results. The cooking times specified refer to a preheated appliance.
- The cooking times specified are intended as a guide. The actual cooking time depends on the quality and temperature of the food before cooking, as well as its weight and thickness.
- If you have not made a particular dish before, start with the shortest specified time. If required, you can continue to cook the food.
- A lower temperature results in more even browning. If necessary, set a higher temperature.
- The values given refer to average quantities for 4 people. If you want to prepare a larger amount, expect a longer cooking time.
- Use the cookware specified. If you use other cookware, the cooking time may be longer or shorter.
- You can use any heat-resistant cookware. Place the cookware in the centre of the wire rack. For large roasts, you can also use the grill tray or glass tray.
- To ensure optimal heat circulation, do not position the wire racks and baking trays too closely.
- To prepare bulky food items, you can remove the side slide-in rack.
- Place the rack directly onto the bottom of the cooking compartment and place the food or roaster onto the rack. Do not place the food or roaster directly onto the bottom of the cooking compartment.
- Open the cooking compartment door on the preheated oven for a short time only and quickly place your food inside the appliance.
- Always use plates, baking tins or ovenproof dishes with the wire rack.
- Eco hot air:
  Energy-saving hot air mode for cakes, meat, bakes and gratins. Optimal use is made of the residual heat. Convenience functions remain switched off (e.g. the interior lighting). The interior temperature can only be displayed while the appliance is heating up. Do not preheat the oven. Make sure that the cooking compartment is cold and that there is nothing already in there when you place the food inside. Then start the specified cooking time. Always keep the appliance door closed when cooking. This prevents heat loss.
- Full surface grill and Full surface grill + air recirculation:
  With these operating modes, there may be a temperature difference between the temperature you have set and the actual temperature inside the oven. This is because grilling and browning are fast cooking processes that require high temperatures. Consequently, for browning and roasting, a higher temperature than is actually needed on the surface of the food is selected.

18.2 Vegetables

Take note of the recommended settings for vegetables.

- Oven-roasted or oven-baked vegetables are a good alternative to pan-fried vegetables. The different flavours become more concentrated and, because the vegetables are roasted, they have a very distinctive taste. In addition, very little fat is required to prepare the vegetables.
- Clean and prepare the vegetables and mix them with a little oil in a bowl. Place them in a heat-resistant dish or in the glass tray or grill tray and spread them out evenly.
- Mix them thoroughly at least once during the cooking process. Once they are cooked, season them and sprinkle them with fresh herbs to taste.
- Vegetables are good as a hot or cold starter or vegetarian main course, or as an accompaniment to meat and fish.
- For small portions (for 2-3 people), use a heat-resistant dish and place it on the wire rack. If you use the glass tray or grill tray, the food will start to burn or dry out.
- Always follow the manufacturer's instructions for precooked and frozen products, too.

Vegetables

Food	Accessory/ cookware	Level	Temperature in °C	Type of heating	Cooking time in mins	Comments
Antipasti	Glass tray or Grill tray	3	200		30[1]	Recipe tip: Drizzle balsamic vinegar over the vegetables whilst they are still hot, and season them.
Antipasti	Glass tray or Grill tray	3	250		15-20[1]	Recipe tip: Drizzle balsamic vinegar over the vegetables whilst they are still hot, and season them.

[1] Turn the food halfway through cooking.

Food	Accessory/ cookware	Level	Temperature in °C	Type of heating	Cooking time in mins	Comments
Chicory	Ovenproof dish	2	180		25-30	Recipe tip: Halve, season, wrap in boiled ham, pour cream sauce or béchamel sauce over the top and sprinkle with cheese.
Chicory	Ovenproof dish	2	190		45-50	Recipe tip: Halve, season, wrap in boiled ham, pour cream sauce or béchamel sauce over the top and sprinkle with cheese. Do not preheat with ; do not open the appliance door.
Escalivada, Mediterranean oven-roasted vegetables	Ovenproof dish	4	250		15[1]	Recipe tip: Aubergines, onions, tomatoes, peppers, oil. Delicious hot or cold.
Vegetable bake	Ovenproof dish	2	180		40-50	Pre-cook or blanch vegetables and other ingredients.
Veggie burgers, frozen	Baking tray + greaseproof paper	2	220		12-15[1]	
Vegetable skewers	Wire rack + grill tray	3	220		24[1]	Shorten the wooden skewers or leave them to soak in water overnight to prevent them from charring. Recipe tip: Peppers, onions, sweetcorn (pre-cooked), cherry tomatoes, courgette.
Sliced pumpkin	Glass tray or Grill tray	3	200		20-30[1]	Recipe tip: Season with oil, garlic, ginger, cumin, salt and pepper.
Oven-roasted tomatoes	Ovenproof dish	2	120		60	Recipe tip: Place cherry tomatoes or sliced tomatoes, rosemary and garlic into the baking dish and drizzle with oil and a little honey. If you wish, you can blanch the tomatoes and skin them before roasting them in the oven.
Peppers, stuffed, vegetarian	Ovenproof dish or Roaster	2	190		50	Recipe tip: Stuff with boiled rice, soft wheat or lentils and onions, cheese, herbs and seasoning/ spices.
Ratatouille	Glass tray or Grill tray	3	200		30-40[1]	Recipe tip: Sprinkle with parmesan just before serving.
Asparagus, green, grilled	Glass tray or Grill tray	3	220		6-10[1]	Recipe tip: Season with onions, oil, vinegar, salt and pepper. Adjust the cooking time depending on size.
Root vegetables	Glass tray or Grill tray	3	200		30[1]	Recipe tip: Season carrots, celery, swede and beetroot with oil, garlic, salt and pepper.

[1] Turn the food halfway through cooking.

Food	Accessory/ cookware	Level	Temperature in °C	Type of heating	Cooking time in mins	Comments
Root vegetables	Glass tray or Grill tray	3	250		15-20[1]	Recipe tip: Season carrots, celery, swede and beetroot with oil, garlic, salt and pepper.
Courgettes, stuffed, vegetarian	Glass tray or Grill tray	2	180		40	Recipe tip: Stuff with grated carrot, spring onion, goats' cheese, garlic, thyme, salt and pepper and sprinkle with parmesan.

[1] Turn the food halfway through cooking.

18.3 Side dishes and meals

Take note of the recommended settings for side dishes and meals.

- The best known oven-cooked side dishes are potato-based, such as potato gratin. However, you can also achieve excellent results when oven-cooking side dishes that are normally pan-fried, e.g. potato fritters and fried potatoes. The advantages of this preparation method: You can prepare relatively large quantities of food at the same time, the cooking smells do not spread so far in the room, and the food can be prepared using less fat.
- Another highly versatile oven-cooked side dish is cheese. It is a very good addition to vegetarian dishes in particular; depending on the preparation method, you can also serve cheese as a starter or finger food.
- Grilled dishes such as bakes and gratins are particularly well suited to being prepared in the oven. Dishes with a dough or pastry base, e.g. pizza and savoury flan, and egg dishes with a filling, e.g. tortilla, are also suitable.
- For small portions (for 2-3 people), use a heat-resistant dish and place it on the wire rack. If you use the glass tray or grill tray, the food will start to burn or dry out.
- Always follow the manufacturer's instructions for precooked and frozen products, too.

Side dishes and meals

Food	Accessory/cookware	Level	Temperature in °C	Type of heating	Cooking time in mins	Comments
Side dishes						
Baking Camembert, breaded, fresh	Baking tray + greaseproof paper	2	180		15-20	Bake until the breadcrumb coating rises in the centre.
Baking Camembert, breaded, frozen	Baking tray + greaseproof paper	2	180		15-20	Bake until the breadcrumb coating rises in the centre.
Baking Camembert, breaded, frozen	Baking tray + greaseproof paper	2	200		15	Bake until the breadcrumb coating rises in the centre.
Roast potatoes	Grill tray	2	180		30-45[1]	Low-fat cooking. Spread evenly across the grill tray and mix thoroughly several times.
Feta	Baking tray	2	250		12	Recipe tip: Place in a baking dish with oil, tomatoes, onions, garlic and rosemary and season with salt and pepper.
Potato wedges	Baking tray + greaseproof paper	2	200		15[1]	Recipe tip: Chop the potatoes and season them with olive oil, paprika and salt.
Potato gratin	Ovenproof dish	2	180		35	
Potato gratin	Ovenproof dish	2	190		55-60	Do not preheat with ; do not open the appliance door.

[1] Turn the food halfway through cooking.

Food	Accessory/cookware	Level	Temperature in °C	Type of heating	Cooking time in mins	Comments
Potatoes on a bed of coarse salt	Ovenproof dish	2	200	--- ---	40-60[1]	Fill the ovenproof dish with 1.5 cm of sea salt. Place small potatoes into the dish with their skins on and brush them with olive oil.
Potato fritters	Baking tray	2	175	✣	20-30[1]	Oil the baking tray liberally, squeeze out the excess liquid from the potato fritter mixture and brush with a little oil. Turn once.
Potato fritters	Baking tray	2	200	--- ---	20-30[1]	Oil the baking tray liberally, squeeze out the excess liquid from the potato fritter mixture and brush with a little oil. Turn once.
Mozzarella sticks, frozen	Baking tray + greaseproof paper	2	180	✣	10	
Oven-baked cheese, fresh	Baking tray	2	180	✣	20	After 10 minutes, cut a cross into the soft cheese and break open. If possible, the baking dish should be not much larger than the cheese so that the cheese does not run.
Chips, fresh	Baking tray + greaseproof paper	3	200	✣	15-20[1]	Recipe tip: Cover with a little oil; season with salt and paprika or curry powder after cooking.
Chips, frozen	Baking tray + greaseproof paper	3	220	✣	14[1]	Spread out frozen chips well on the baking tray.
Goats' cheese wrapped in bacon	Glass tray or Baking tray	2	220	✣	8-10	Either goats' cheese or goats' camembert can be used.
Goats' cheese wrapped in bacon	Glass tray or Baking tray	3	220	≈≈≈	8-10	Either goats' cheese or goats' camembert can be used.
Goats' cheese with honey	Glass tray or Baking tray	2	200	✣	8	Recipe tip: Drizzle lavender honey over the goats' cheese or goats' camembert and sprinkle with pine nuts.
Goats' cheese with honey	Glass tray or Baking tray	3	200	≈≈≈	8	Recipe tip: Drizzle lavender honey over the goats' cheese or goats' camembert and sprinkle with pine nuts.
Meals						
American pizza, deep-pan, frozen	Baking tray	2	200	--- ---	20-24	No need to preheat. If the appliance has been preheated, reduce the cooking time by 4 minutes.
Farmer's omelette	Ovenproof dish	2	160	✣	40	Recipe tip: With green and white asparagus; also with gravlax.
Enchiladas, au gratin	Glass tray or Grill tray	2	200	--- ---	15-20	
Tarte flambée, fresh	Baking tray	2	250	--- ---	8-10	Recipe tip: Traditional or with goats' cheese, Parma ham, figs and spring onion.
Tarte flambée, frozen	Wire rack	2	200	✣	10-12	

[1] Turn the food halfway through cooking.

Food	Accessory/cookware	Level	Temperature in °C	Type of heating	Cooking time in mins	Comments
Tarte flambée, frozen	Wire rack	2	230	--- ---	8-10	
Tarte flambée, pre-baked	Baking tray + greaseproof paper	2	250	✣	7	
Frittata	Ovenproof dish	2	190	--- ---	45-50	Recipe tip: With spinach, onion and prawns.
Spring rolls, frozen	Baking tray + greaseproof paper	2	225	✣	18-20[1]	
Macaroni cheese	Ovenproof dish	2	180/220	✣	10-20	To obtain a crust on the cheese, increase the temperature to 220 °C after 10 minutes and leave to brown for a further 10 minutes.
Cheese spätzle (Swabian noodle dish)	Ovenproof dish	2	180/220	✣	30	Gradually layer the freshly cooked spätzle in the baking dish, sprinkling each layer with cheese. Then top the dish with cheese and roasted onion, raise the temperature to 220 °C and cook for 5 minutes.
Lasagne	Ovenproof dish	2	175	✣	35	Recipe tip: Traditional or vegetarian with grilled vegetables and buffalo mozzarella.
Lasagne	Ovenproof dish	2	180-190	✣^{e}	55-60	Recipe tip: Traditional or vegetarian with grilled vegetables and buffalo mozzarella. Do not preheat with ✣^{e}; do not open the appliance door.
Mini spring rolls, frozen	Baking tray + greaseproof paper	2	225	✣	10[1]	
Pizza, fresh	Baking tray	2	230-250	--- ---	10-15	Lightly grease the baking tray or line it with greaseproof paper.
Pizza, frozen	Wire rack	2	200	✣	11-13	
Pizza, frozen	Wire rack	2	220	--- ---	11-13	
Pizza, pre-baked	Baking tray + greaseproof paper	2	230	✣	6-8	
Pizza, pre-baked	Baking tray + greaseproof paper	2	230	--- ---	6-8	
Quiche	Tart dish or tin	2	200	--- ---	20 + 20	Prick the base several times with a fork and pre-bake for 20 minutes. Pour the mixture onto the base and then bake for a further 20 minutes.
Tortilla	Ovenproof dish	2	160	---	25	Recipe tip: With peppers, olives, onion, Serrano ham and Manchego cheese.
Onion tart	Baking tray	2	200	--- ---	30-40	Prick the base several times with a fork.

[1] Turn the food halfway through cooking.

18.4 Fish

Take note of the recommended settings for fish.

- For food hygiene reasons, ensure that fish has a core temperature of at least 62-70 °C after cooking. This is also the ideal cooking temperature.
- Do not season the fish with salt until it is fully cooked. This ensures that the natural flavour is maintained and that less water is drawn out of the fish.
- Use a small amount of oil to grease the wire rack or baking tray so that the fish does not stick to it.
- For fillets with skin: Place the fish on the rack or tray with the skin side up – this helps to hold the fish together and maintain its flavour.
- Shorten the wooden skewers or, before skewering the ingredients, leave the skewers to soak in water overnight to prevent them from charring.
- Always follow the manufacturer's instructions for pre-cooked and frozen products, too.

Fish

Food	Accessory/ cookware	Level	Temperature in °C	Type of heating	Cooking time in mins	Comments
Sea bream, whole	Wire rack + grill tray	3	200-220		20-25[1]	Recipe tip: Stuff with lemon, garlic and thyme, or use mint for a summery touch. Make a diagonal incision into the skin of the sea bream.
Sea bream, whole	Baking tray	3	190		20-25[1]	Recipe tip: Stuff with lemon, garlic and thyme, or use mint for a summery touch. Make a diagonal incision into the skin of the sea bream.
Fish kebabs	Wire rack + grill tray	3	200		12[1]	Use firm types of fish, e.g. salmon, coley, ocean perch and cod.
Fish fingers, frozen	Baking tray + greaseproof paper	2	220		15-17[1]	
Trout, whole	Baking tray	3	200-220		16[1]	Recipe tip: Stuff with lemon, garlic and parsley.
Prawn skewers, fresh	Wire rack + grill tray	3	180		10[1]	
Prawn skewers, frozen	Wire rack + grill tray	3	180		12[1]	
Salmon steak	Wire rack + grill tray	3	250		10-12	Recipe tip: Marinate in a mixture of sweet lime, salt, pepper and garlic.
Salmon steak	Baking tray	2	200		10-12	Recipe tip: Marinate in a mixture of sweet lime, salt, pepper and garlic.
Tuna steak	Baking tray	2	200		8-10	Recipe tip: Season Asian-style with soy sauce, sesame oil, ginger, honey, garlic, chilli and coriander seeds.
Calamari rings, frozen	Baking tray + greaseproof paper	2	220		8-12	

[1] Turn the food halfway through cooking.

18.5 Meat

Take note of the recommended settings for meat.

- Time to rest: Allow the meat to rest for 5-15 minutes on a wire rack after cooking. This gives the meat a chance to "relax". The circulation of the meat juice slows and, when the meat is cut, less juice is lost. Large pieces of meat, e.g. joints, can be left to rest in the oven. Smaller pieces of meat, e.g. steaks, should be wrapped in aluminium foil and left to rest outside the oven.
- For small portions (2–3 people), it is a good idea to use a heat-resistant baking dish or tin so that the food does not begin to burn or dry out.

- Use the grill tray or roaster for a large joint of meat and for preparation methods that involve adding a lot of liquid to the joint.
- For best results, leave meat to marinate overnight and remove the marinade before roasting or grilling, e.g. using the back of a knife or a spoon. Otherwise, the herbs and spices will burn.
- If the joint of meat has become too dark in colour and the skin is burnt in places, reduce the set temperature the next time you cook a joint and check the shelf level.
- If the joint is cooked but the sauce is slightly burnt, use a smaller roaster the next time you cook a joint and add more liquid. If the sauce is too watery, use a larger roaster and add less liquid.

Meat

Food	Accessory/ cookware	Level	Temperature in °C	Type of heating	Cooking time in mins	Comments
Beef						
Beef joint, 1.5 kg	Glass tray or Grill tray	2	180		90-120[1]	
Roast beef, sirloin, rare, 1 kg	Glass tray or Grill tray	2	230/180		25-35[2]	Recipe tip: Delicious with Béarnaise sauce or cold cut with remoulade and roast potatoes.
Roast beef, sirloin, well done, 1 kg	Glass tray or Grill tray	2	230/180		50-60[2]	Recipe tip: Delicious with Béarnaise sauce or cold cut with remoulade and roast potatoes.
Roast beef, sirloin, medium rare, 1 kg	Glass tray or Grill tray	2	230/180		30-40[2]	Recipe tip: Delicious with Béarnaise sauce or cold cut with remoulade and roast potatoes.
Rump steak, medium rare, 500 g	Glass tray or Grill tray	2	200		30	
Rump steak, medium rare, 500 g	Glass tray or Grill tray	2	200	e	45-50	Do not preheat with e; do not open the appliance door.
Pork						
Smoked pork, 1 kg	Glass tray or Grill tray	2	180/160		50-60[2]	
Roast pork with crackling, joint of pork with crispy skin, well done, 1.5 kg	Wire rack + grill tray	2	180/200		60-70[3]	Score the skin diagonally in both directions so that it is cross-hatched. This makes it nice and crispy. Before cooking, boil the joint in water for 10 minutes with the skin on.
Rolled roasting joint	Glass tray or grill tray or Wire rack + grill tray	2	180/230		65-70[3]	
Rolled roasting joint	Glass tray or grill tray or Wire rack + grill tray	2	180/230		75-80[3]	
Joint of pork, leg, 1 kg	Glass tray or Grill tray	2	230/180		45-50[2]	Score the skin diagonally in both directions so that it is cross-hatched. This makes it nice and crispy.

[1] Sear on all sides in a frying pan or roasting dish on the hob first.
[2] Sear meat at a high temperature; set the lower temperature after 15-20 minutes.
[3] Cook meat at a low temperature; set it to cook at the higher temperature for the last 15-20 minutes.

Food	Accessory/ cookware	Level	Temperature in °C	Type of heating	Cooking time in mins	Comments
Joint of pork, neck, 1.5 kg	Glass tray or Grill tray	2	230/180		85-95[2]	
Joint of pork, neck, 1.5 kg	Glass tray or Grill tray	2	230/180		70-80[2]	
Fillet of pork, 250 g	Glass tray or Grill tray	2	180		30	
Fillet of pork, 250 g	Glass tray or Grill tray	2	180		40-45	Do not preheat with ; do not open the appliance door.
Fillet of pork, whole, 400 g	Glass tray or Grill tray	2	230/180		20-25[2]	Recipe tip: Marinate in a mixture of oil, garlic and parsley.
Pork medallions	Glass tray or Grill tray	2	180		12-15[1]	Recipe tip: Just before you take them out the oven, add a knob of butter and a sprig of rosemary to the glass tray or grill tray and cook all together for a little longer in the appliance.
Knuckle of pork	Wire rack + grill tray	2	150/200		40-45[3]	Score the skin diagonally in both directions so that it is cross-hatched. This makes it nice and crispy. Before cooking, boil the joint in water for 90 minutes with the skin on.
Veal						
Joint of veal, 1.5 kg	Glass tray, Grill tray or Roaster	2	180		50-60[1]	
Breast of veal, stuffed	Glass tray, Grill tray or Roaster	2	120-130		120	
Veal knuckle	Glass tray, Grill tray or Roaster	2	150/180		50-60[3]	
Veal loin	Glass tray, Grill tray or Roaster	2	160-170		20	
Game						
Saddle of rabbit	Glass tray, Grill tray or Roaster	2	180		15-25[1]	Recipe tip: Marinate in a mixture of garlic, rosemary, olive oil and high-quality balsamic vinegar.
Knuckle of lamb	Glass tray, Grill tray or Roaster	2	180-200		35-45	

[1] Sear on all sides in a frying pan or roasting dish on the hob first.
[2] Sear meat at a high temperature; set the lower temperature after 15-20 minutes.
[3] Cook meat at a low temperature; set it to cook at the higher temperature for the last 15-20 minutes.

Food	Accessory/ cookware	Level	Temperature in °C	Type of heating	Cooking time in mins	Comments
Leg of lamb, medium rare	Glass tray, Grill tray or Roaster	2	180-190	✣	100[1]	Recipe tip: Marinate overnight in a mixture of olive oil, garlic, rosemary and sliced lemon.
Leg of lamb, well done	Glass tray, Grill tray or Roaster	2	180-190	✣	120[1]	Recipe tip: Marinate overnight in a mixture of olive oil, garlic, rosemary and sliced lemon.
Leg of roe venison	Glass tray, Grill tray or Roaster	2	170-180	✣	60-80	
Saddle of venison	Glass tray, Grill tray or Roaster	2	165-175	✣	20	
Saddle of venison	Glass tray, Grill tray or Roaster	2	165-175	⎓	20-25	
Wild boar joint	Glass tray, Grill tray or Roaster	2	170	✣	60-90[1]	Recipe tip: Marinate overnight in a mixture of oil, garlic, mustard and herbes de Provence.
Miscellaneous						
Rashers of bacon, oven-cooked bacon, thick	Baking tray + greaseproof paper	3	190	✣	8-12	
Rashers of bacon, oven-cooked bacon, thin	Baking tray + greaseproof paper	3	180	✣	8-10	Once you have taken the bacon out of the appliance, place it on some kitchen towel to soak up the fat.
Meatloaf, fresh, 700 g	Wire rack + grill tray	2	160	✣	60	
Meatballs, 25 g each	Baking tray + greaseproof paper	2	200	✣	25-30	Recipe tip: Easy to make into a meal, e.g. meatballs with tomato sauce, Swedish meatballs and Königsberger Klopse (Prussian meatballs in a white sauce with capers).
Meatballs, 80 g each	Baking tray + greaseproof paper	2	200	✣	30-35	The flatter the meatballs, the faster they cook. Easy to make in large quantities.
Meatballs, lightly fried, 25 g each	Baking tray + greaseproof paper	2	200	✣	15	Recipe tip: Place meatballs made from minced lamb or rabbit on skewers and serve with mint yoghurt or fig mustard.
Meatballs, lightly fried, 80 g each	Baking tray + greaseproof paper	2	200	✣	20	For nicely browned yet juicy meatballs, fry them lightly in the frying pan first before continuing to cook them in the appliance.
Peppers, stuffed, with minced meat	Ovenproof dish or Roaster	2	175	✣	55-60	Recipe tip: Stuff with minced meat and cook in tomato sauce.

[1] Sear on all sides in a frying pan or roasting dish on the hob first.
[2] Sear meat at a high temperature; set the lower temperature after 15-20 minutes.
[3] Cook meat at a low temperature; set it to cook at the higher temperature for the last 15-20 minutes.

18.6 Poultry

Take note of the recommended settings for poultry.

- Poultry will turn out particularly crispy and brown if you baste it towards the end of the roasting time with butter, salted water, drained fat or orange juice.
- When cooking duck or goose, pierce the skin underneath the wings to allow the fat to run out.
- Use a roaster or another heat-resistant baking dish or tin for dishes that involve adding a lot of liquid to the roast. The same applies if a lot of fat is likely to drain from the food, e.g. roast goose.

Poultry

Food	Accessory/ cookware	Level	Temperature in °C	Type of heating	Cooking time in mins	Comments
Duck, whole, 1.5-2 kg	Wire rack + grill tray or Roaster	2	160/180	--- ---	75[1]	Recipe tip: Stuff with oranges, apples or dried fruit.
Duck breast	Roaster or Ovenproof dish	2	190		25-35	Score the skin diagonally in both directions so that it is cross-hatched.
Goose, whole, 5 kg	Wire rack + grill tray or Roaster	2	160/190		110-130[1]	Recipe tip: Stuff with apples, onions and marjoram and pin the opening closed with a cocktail stick or similar sharp item.
Goose, whole, 5 kg	Wire rack + grill tray or Roaster	2	160/190	--- ---	110-130[1]	Recipe tip: Stuff with apples, onions and marjoram and pin the opening closed with a cocktail stick or similar sharp item.
Chicken nuggets, frozen	Baking tray + greaseproof paper	2	200		15[2]	
Chicken, whole, 1 kg, in accordance with EN60350-1	Wire rack + grill tray	2	190		70-80	Preheat.
Chicken, whole, 1 kg, in accordance with EN60350-1	Wire rack + grill tray	2	190		70-80	Preheat.
Chicken breast	Wire rack + grill tray	2	200		20-25	Recipe tip: Rub with tandoori paste before cooking.
Chicken breast	Wire rack + grill tray	2	200	e	50	Recipe tip: Rub with tandoori paste before cooking. No need to preheat; do not open appliance door.
Chicken legs	Wire rack + grill tray	3	220		30[2]	After the leg is turned, the side with more skin should be at the top. This makes it nice and crispy. Marinate in a mixture of oil, rosemary, sliced lemon and garlic.
Chicken legs	Wire rack + grill tray	3	220		30[2]	After the leg is turned, the side with more skin should be at the top. This makes it nice and crispy. Marinate in a mixture of oil, rosemary, sliced lemon and garlic.

[1] Cook meat at a low temperature; set it to cook at the higher temperature for the last 15-20 minutes.
[2] Turn the food halfway through cooking.

Food	Accessory/ cookware	Level	Temperature in °C	Type of heating	Cooking time in mins	Comments
Chicken drumsticks	Wire rack + grill tray	3	220		30[2]	Recipe tip: Asian marinade with soy sauce, honey, chilli, garlic, ginger, cumin, sweet lime zest and coriander.
Chicken drumsticks	Wire rack + grill tray	3	220		30[2]	Recipe tip: Asian marinade with soy sauce, honey, chilli, garlic, ginger, cumin, sweet lime zest and coriander.
Turkey, whole	Wire rack + grill tray or Roaster	2	160/200		120-180[1]	
Turkey, whole	Wire rack + grill tray or Roaster	2	160/200		120-180[1]	
Quail, whole, 150 g each	Wire rack + grill tray	3	200		20-25	Baste with oil and seasoning/ spices, e.g. paprika, thyme, juniper and garlic.
Quail breast	Baking tray	3	220		10-12	Baste with oil and seasoning/ spices, e.g. paprika, thyme, juniper and garlic.

[1] Cook meat at a low temperature; set it to cook at the higher temperature for the last 15-20 minutes.
[2] Turn the food halfway through cooking.

18.7 Grilling and roasting

Note the recommended settings for grilling and roasting.

- Do not grill food with the oven door open.
- For grilling, use the grill tray with the wire insert (depending on the model, this may be an accessory or a special accessory). Pour approximately 100 ml water into the grill tray; this will catch the meat juices so that the oven stays clean. If you pour in too much water, this may alter the cooking result because too much steam will be produced.
- The pieces of food to be grilled should be of roughly the same thickness (at least 2-3 cm). This will allow them to brown evenly and remain succulent and juicy. Never add salt to meat before grilling it. Place the food to be grilled directly on the wire rack.
- If you use wooden skewers, they may char. To prevent this, shorten them as far as possible, leave them to soak in water overnight before skewering the ingredients or use metal skewers.
- For small quantities, use the energy-saving "Compact grill" type of heating. With this type of heating, only the centre part of the grill is heated. Place the food to be grilled in the centre of the wire rack.

Grilling and roasting

Food	Accessory/ cookware	Level	Temperature in °C	Type of heating	Cooking time in mins	Comments
Browning meringue	Springform tin	2	220-250		4-5[1]	Stay by the appliance so that the meringue does not brown too much.
Bratwurst (German sausage)	Wire rack + grill tray	3	270		10[2]	
Croque monsieur	Baking tray + greaseproof paper	3	190		8-11[1]	

[1] Brown to the level you require.
[2] Turn the food halfway through cooking.

Food	Accessory/ cookware	Level	Temperature in °C	Type of heating	Cooking time in mins	Comments
Croutons	Baking tray	2	180		15[2]	Recipe tip: Mix fresh white bread with olive oil, garlic and rosemary leaves. Avoid using too much oil and wait until you are ready to serve before pouring it on; otherwise, the bread cubes will become saturated. Turn several times.
Halloumi cheese, grilled cheese	Wire rack + grill tray	3	250		5-8	Halloumi is a semi-hard cheese used in Turkish and Greek cooking. It is excellent grilled.
Merguez sausage	Wire rack + grill tray	3	250		12[2]	
Prunes, wrapped in bacon, dried	Baking tray + greaseproof paper	3	200		8-10	Equally delicious with dates or apricots.
Chicken satay	Wire rack + grill tray	3	250		10-14[2]	Serve with peanut sauce.
Shish kebab	Wire rack + grill tray	3	190		16[2]	
Pork belly, sliced	Wire rack + grill tray	2	230		18-20[2]	
Pork belly, sliced	Wire rack + grill tray	2	230		18-20[2]	
Spare ribs, raw	Wire rack + grill tray	3	220		40[2]	Recipe tip: Place in a mixture of oil, mustard, balsamic vinegar, honey, garlic, Worcester sauce, tomato purée and Tabasco sauce.
Spare ribs, raw	Wire rack + grill tray	3	220		30[2]	Recipe tip: Place in a mixture of oil, mustard, balsamic vinegar, honey, garlic, Worcester sauce, tomato purée and Tabasco sauce.
Spare ribs, precooked	Wire rack + grill tray	3	200-220		24[2]	
Spare ribs, precooked	Wire rack + grill tray	3	200-220		24[2]	
Toast Hawaii	Baking tray + greaseproof paper	3	190		8-10[1]	
Toasting bread	Wire rack	3	200		2:30-3	Preheat for up to 5 minutes. Stay by the appliance so that the toast does not brown too much. Do not grill food with the oven door open.

[1] Brown to the level you require.
[2] Turn the food halfway through cooking.

18.8 Baked items

Note the recommended settings for baked items.

- We recommend using dark-coloured metal baking tins as these absorb heat more effectively. Place the baking tin in the centre of the wire rack.
- If you are baking tray bakes without greaseproof paper, lightly grease the baking tray beforehand.
- Small baked items, e.g. cream puffs, biscuits and puff pastry parcels, can be baked on 2 levels, 1+3.
- If you are baking on more than one level, it is normal for food on baking trays placed in the oven at the same time to be ready at different times. Leave the food on the baking trays lower down in the oven to cook for a little longer, or place them in the appliance earlier next time.

- Before cutting the baked items, leave them to cool on a wire rack.
- If the baked items are too dark on the bottom, place them a level up and select a lower temperature.
  If the baked items are too dark on the top, place them a level down, select a lower temperature and extend the baking time a little.
- If the cake is too dry, set the temperature a little higher. If the cake remains uncooked in the middle, set a lower temperature.
  Baking times cannot be reduced by setting a higher temperature; it is better to set the temperature a little lower.
- If the cake collapses, use less liquid or set the temperature 10 °C lower. Do not open the oven door too soon.
- If the cake only rises in the middle, grease the sides of the baking tin.
- Do not remove the biscuits from the baking tray; place the baking tray back into the hot oven for a short period and remove the biscuits whilst they are still hot.
- If the cake does not come away from the tin when you are trying to turn it out, carefully slide a knife around the sides to loosen it. Turn the cake tin upside down again and cover it several times with a cold, wet cloth. Next time, grease the tin well and sprinkle some bread crumbs into it.
- Always follow the manufacturer's instructions for precooked and frozen products, too.

Baked items

Food	Accessory/ cookware	Level	Temperature in °C	Type of heating	Cooking time in mins	Comments
Cakes						
Apple pie, EN60350-1	Springform cake tin, diameter 20 cm	2	160		90-105[1]	Preheat.
Apple pie, EN60350-1	Springform cake tin, diameter 20 cm	1	160		90-100[1]	Preheat.
Sponge base	Springform tin	2	150		40-45	Lightly grease the baking tray.
Swiss roll	Baking tray + greaseproof paper	2	190		6	Turn out whilst still hot onto a piece of greaseproof paper sprinkled with sugar, then roll up.
Puff pastry strudel	Baking tray + greaseproof paper	2	200		20-25	Recipe tip: Fill with custard and cherries or apples.
Tray bakes	Baking tray	2	165-170		20-30	Lightly grease the baking tray.
Tray bakes	Baking tray	2	165-170		40-50	Lightly grease the baking tray.
Bundt cake, ring cake	Ring cake tin	1	165		30	Recipe tip: Traditional ring cake or with bacon and walnuts.
Bundt cake, ring cake	Ring cake tin	1	170	e	55	Recipe tip: Traditional ring cake or with bacon and walnuts. Do not preheat with e; do not open the appliance door.
Yeast tray bakes	Baking tray	2	165		30-35	Recipe tip: Top with plums, figs or onion and ham.
Yeast tray bakes	Baking tray	2	165		30-35	Recipe tip: Top with plums, figs or onion and ham.
Cheesecake	Springform tin	1	160-165		70-75	
Cheesecake	Springform tin	1	160-165		70-75	
Cheesecake	Springform tin	1	160-165		85-90	
Cheesecake	Springform tin	1	160-165		80-90	
Cheesecake	Springform tin	1	160-165		40-45	Cheesecake with half quark filling.

[1] Deactivate the "Rapid heating" function in the basic settings.
→ *"Basic settings", Page 17*

[2] Preheat the appliance to the specified temperature. Turn the temperature down to the second specified temperature when placing the food in the oven.

Food	Accessory/ cookware	Level	Temperature in °C	Type of heating	Cooking time in mins	Comments
Loaf cake	Loaf tin	2	160-170		60-65	To ensure even browning, place the tin lengthways in the cooking compartment.
Loaf cake	Loaf tin	2	160-170		55-60	To ensure even browning, place the tin lengthways in the cooking compartment.
Fruit flan with shortcrust pastry	Tart dish or tin	2	165		40-50	Recipe tip: Top with strawberries or apricots and marzipan.
Fruit flan with shortcrust pastry	Tart dish or tin	2	170		40-50	Recipe tip: Top with strawberries or apricots and marzipan.
Fruit flan with shortcrust pastry	Tart dish or tin	2	165		45-55	Recipe tip: Top with strawberries or apricots and marzipan.
Sponge cake	Springform tin	2	160-170		50-60	
Sponge cake	Springform tin	2	160-170		50-60	
Tart	Tart dish or tin	2	190		30-40	French flan with a shortcrust pastry base, e.g. tarte aux pommes, tarte tatin, tarte au chocolat and tarte au citron.
Tart	Tart dish or tin	2	190		30-40	French flan with a shortcrust pastry base, e.g. tarte aux pommes, tarte tatin, tarte au chocolat and tarte au citron.
Tart	Tart dish or tin	2	190		40-45	French flan with a shortcrust pastry base, e.g. tarte aux pommes, tarte tatin, tarte au chocolat and tarte au citron.
Water sponge cake, in accordance with EN60350-1	Springform cake tin, diameter 26 cm	2	160		22-30[1]	Preheat.
Water sponge cake, in accordance with EN60350-1	Springform cake tin, diameter 26 cm	2	160		20-30[1]	Preheat.
Small baked items						
Puff pastry	Baking tray + greaseproof paper	3	200		15	Recipe tip: With sesame seeds, poppy seeds, icing.
Puff pastry goods	Baking tray + greaseproof paper	2	200		15-20	
Puff pastry twists	Baking tray + greaseproof paper	3	200		15	Recipe tip: With cheese, ham, nuts.
Puff pastry parcels, filled	Baking tray + greaseproof paper	3	200		15	Recipe tip: Fill with ham and cheese or apples and raisins.

[1] Deactivate the "Rapid heating" function in the basic settings.
→ *"Basic settings", Page 17*

[2] Preheat the appliance to the specified temperature. Turn the temperature down to the second specified temperature when placing the food in the oven.

Food	Accessory/ cookware	Level	Temperature in °C	Type of heating	Cooking time in mins	Comments
Small pastries	Baking tray + greaseproof paper	2	200		15-20	Recipe tip: With custard, fruit.
Brownies	Baking tray + greaseproof paper	2	120		60	Cut into squares or rectangles once they are baked. The low temperature means that the brownies will stay gooey in the middle.
Brownies	Baking tray + greaseproof paper	2	180	e	40-45	Do not preheat with e; do not open the appliance door.
Cookies, 20 g each	Baking tray + greaseproof paper	2	175		12-14	With chocolate, raisins, nuts or lemon.
Breadsticks	Baking tray + greaseproof paper	2	160		30	Sprinkle with sea salt, rosemary, curry powder, sesame seeds or caraway seeds.
Waffle biscuits	Baking tray + greaseproof paper	2	140		8-10	Shape the waffle biscuits whilst they are still hot, e.g. into ice cream cones or small rolls for dessert.
Muffins	Muffin tray, Paper cases	2	160		25-30	With chocolate, nuts or raisins.
Muffins	Muffin tray, Paper cases	2	160		25-30	With chocolate, nuts or raisins.
Biscuits, shortbread	Baking tray	2	160-170		15	
Biscuits, shortbread	Baking tray	2	160-170		18	
Small cakes, in accordance with EN 60350-1	Baking tray	2	150		25-30[1]	Preheat.
Small cakes, in accordance with EN 60350-1	Baking tray + glass tray	3 and 1	150		28-32[1]	Preheat. Applies to baking on 2 levels.
Small cakes, in accordance with EN 60350-1	Baking tray	3	160		20-25[1]	Preheat.
Shortbread, in accordance with EN 60350-1	Baking tray	2	140		35-40[1]	Preheat.
Shortbread, in accordance with EN 60350-1	Baking tray + glass tray	3 and 1	140		35-40[1]	Preheat. Applies to baking on 2 levels.
Shortbread, in accordance with EN 60350-1	Baking tray	2	140		26-30[1]	Preheat.

[1] Deactivate the "Rapid heating" function in the basic settings.
→ *"Basic settings", Page 17*

[2] Preheat the appliance to the specified temperature. Turn the temperature down to the second specified temperature when placing the food in the oven.

Food	Accessory/ cookware	Level	Temperature in °C	Type of heating	Cooking time in mins	Comments
Cream puffs, éclairs	Baking tray + greaseproof paper	2	180	✣	35	Recipe tip: Fill with vanilla custard, chocolate mousse, fruit cream or mocha cream.
Cream puffs, éclairs	Baking tray + greaseproof paper	2	180	▭	40	Recipe tip: Fill with vanilla custard, chocolate mousse, fruit cream or mocha cream.
Cream puffs, éclairs	Baking tray + greaseproof paper	2	180	✣	35	Recipe tip: Fill with vanilla custard, chocolate mousse, fruit cream or mocha cream.
Bread, bread rolls						
Baguette, prebaked	Baking tray + greaseproof paper	2	220	▭	10-12	
Puff pastry strudel	Baking tray + greaseproof paper	2	200	✣	20-25	Recipe tip: Fill with sheep's cheese and feta.
Bread in a loaf tin	Loaf tin	2	175	▭	40-45	
Bread rolls, fresh, 50 g each	Baking tray + greaseproof paper	2	250/200	▭	15-20[2]	
Bread rolls, frozen	Baking tray + greaseproof paper	2	180	✣	10-12	
Bread rolls, frozen	Baking tray + greaseproof paper	2	200	▭	10-12	
Bread rolls, prebaked	Baking tray + greaseproof paper	2	210	▭	8-10	
Bread rolls, prebaked	Baking tray + greaseproof paper	2	200	✣	8-10	
Ciabatta, prebaked	Baking tray + greaseproof paper	2	190	▭	12-14	
Ciabatta, prebaked	Baking tray + greaseproof paper	2	180	✣	12-14	
Croissants, frozen	Baking tray + greaseproof paper	2	170	▭	15-25	
Flatbread	Baking tray + greaseproof paper	2	200	✣	15-20	The cooking time depends on the size and thickness of the flatbread.
Flatbread	Baking tray + greaseproof paper	2	210	▭	15-20	The cooking time depends on the size and thickness of the flatbread.
Foccacia	Baking tray + greaseproof paper	2	210	▭	15-20	Top with various ingredients, e.g. herbs, sea salt, olives, anchovies, onion, ham, tomatoes or cheese.

[1] Deactivate the "Rapid heating" function in the basic settings.
→ *"Basic settings", Page 17*

[2] Preheat the appliance to the specified temperature. Turn the temperature down to the second specified temperature when placing the food in the oven.

Food	Accessory/ cookware	Level	Temperature in °C	Type of heating	Cooking time in mins	Comments
Plaited loaf	Baking tray + greaseproof paper	2	165		20	
Plaited loaf	Baking tray + greaseproof paper	2	170	e	30-35	Do not preheat with e; do not open the appliance door.
Garlic baguette, herb baguette	Baking tray + greaseproof paper	2	200		8-10	
Lye bread, frozen	Baking tray + greaseproof paper	2	200		10-12	
Multigrain bread	Baking tray + greaseproof paper	2	200/170		40-50[2]	
Multigrain bread	Baking tray + greaseproof paper	2	200/170		40-50[2]	
Olive and tomato bread	Baking tray	2	200/170		40-50[2]	
Sourdough bread	Baking tray	2	200/180		50-60[2]	

[1] Deactivate the "Rapid heating" function in the basic settings.
→ *"Basic settings", Page 17*
[2] Preheat the appliance to the specified temperature. Turn the temperature down to the second specified temperature when placing the food in the oven.

18.9 Desserts

Note the recommended settings for desserts.

- Oven-cooked desserts are very easy to prepare – all that remains is to put them in the oven. This preparation method is useful for relatively large quantities, for example if you have guests.
- Oven-cooked desserts are generally eaten hot, and are very enjoyable particularly during the colder months.

Desserts

Food	Accessory/ cookware	Level	Temperature in °C	Type of heating	Cooking time in mins	Comments
Apple crumble	Ovenproof dish	2	200		35-40	Apple bake with a crumble topping; equally delicious with berries or mirabelles.
Baked apples	Ovenproof dish	2	190-200		20-30	Recommendation: Use cooking apples, e.g. Boskoop apples. These are particularly well suited for cooking and baking. Summer version: Stuff with ricotta cheese, lemon, honey, cardamom, vanilla and pine nuts.
Clafoutis	Ovenproof dish	2	190		30-35	French dessert: Traditionally made with cherries; equally delicious with mirabelles or berries.
Clafoutis	Ovenproof dish	2	200	e	55	French dessert: Traditionally made with cherries; equally delicious with mirabelles or berries. Do not preheat with e; do not open the appliance door.

Food	Accessory/ cookware	Level	Temperature in °C	Type of heating	Cooking time in mins	Comments
Compote	Glass tray or Grill tray	2	160-180	✣	30-40	E.g. apricots or a variety of berries. Do not add any liquid; stir thoroughly several times. Refine with honey, fresh vanilla or cinnamon.
Compote	Glass tray or Grill tray	2	200	⎓	30-40	E.g. apricots or a variety of berries. Do not add any liquid; stir thoroughly several times. Refine with honey, fresh vanilla or cinnamon.
Meringue	Baking tray + greaseproof paper	2	100	✣	150	When dividing up the mixture, make sure that the portions are spread as thinly as possible so that the mixture dries out well.
Bread and butter pudding, Kirschenmichel (German bread and butter pudding with sour cherries)	Ovenproof dish	2	150	✣	50-55	E.g. with cherries or apricots
Sweet bake	Ovenproof dish	2	160-180	✣	30-40	E.g. semolina, quark or rice pudding
Topfenpalatschinken (crepes with quark filling)	Ovenproof dish	2	180-190	✣	8-10	Austrian speciality: Pancakes filled with quark and raisins, topped with cream and grilled.

18.10 Preserving food

Preserve fruit and vegetables in jars.

- You can easily preserve fruit and vegetables in your appliance.
- Cook food as soon as possible after purchase or after it has been harvested. Prolonged storage reduces the vitamin content and means that food is on the verge of fermenting.
- Only use fruit and vegetables that are in good condition.
- The appliance is not suitable for preserving meat.
- Carefully check and clean the preserving jars, rubber sealing rings, clips and springs.
- Place the preserving jars in a heat-resistant vessel containing water. Make sure that they do not touch. The water level must reach at least three quarters of the way up to the top of the contents of the jars.
- Once the cooking time has elapsed, open the oven door. Do not remove the preserving jars from the cooking compartment until they have completely cooled down.
- Store the preserves in a cool, dark and dry place, e.g. in a pantry. Once the jars have been opened, consume the contents quickly and store in the refrigerator.

Preserving food

Food	Accessory/ cookware	Level	Temperature in °C	Type of heating	Cooking time in mins	Comments
Fruit	Wire rack	1	150-160	⎓	35-40	Pour into sealed preserving jars.
Vegetables	Wire rack	1	190-200	⎓	60-120	Pour into sealed preserving jars.

18.11 Disinfecting

Note the recommended settings for disinfection.

- Before you begin preserving the food, the jars should be disinfected in the oven to prevent the food from spoiling. This is the only way to ensure that preserves keep for a relatively long time and can be stored outside of the refrigerator.
- Disinfect the empty jars at 100 °C for at least 20 minutes in Hot air mode. The lids and rubber preserving seals for the jars can be disinfected at the same time in boiling water to avoid them drying out in the dry heat of the oven.

Disinfecting

Food	Accessory/ cookware	Level	Temperature in °C	Type of heating	Cooking time in mins	Comments
Disinfecting	Wire rack	2	100		20-25	Preserving jars, baby bottles

18.12 Drying

Dry fruit, vegetables or herbs.

- Drying is a method of preserving food in which up to 50% of the liquid contained in the food is removed by exposing it to dry heat. This also makes the flavour more intense.
- The thicker the food, the longer the drying process takes. The quickest way to dry food – which is also the method that saves the most energy – is to cut it into slices.
- Place the prepared food onto a wire rack or baking tray covered with greaseproof paper. Turn the food from time to time during the drying process.
- The duration depends on the thickness of the food and on the natural level of moisture in the food, e.g. tomatoes take longer to dry out than mushrooms.
- If you want to dry food on 2 levels at the same time, use levels 1 and 3 (or 2 and 4).

Drying

Food	Accessory/ cookware	Level	Temperature in °C	Type of heating	Cooking time in mins	Comments
Apple, in rings	Wire rack + greaseproof paper	2	70		5-8	
Herbs	Wire rack + greaseproof paper	2	50-60		1½-2	E.g. chives, parsley and sage
Mushrooms, sliced	Wire rack + greaseproof paper	2	50-60		3-4	
Tomatoes, in quarters	Wire rack + greaseproof paper	2	60-70		7-8	Core the tomatoes to avoid an extended drying time.

18.13 Baking stone

Whether you are baking crispy pizza or fresh bread, using the baking stone will produce results that are comparable to (or even exceed) those you would get from a large stone oven because you are able to control the baking temperature precisely.

- You will need a baking stone and heating element – these are special accessories.
- Depending on the size, you can place several pizzas, bread rolls or other baked items on the baking stone at once.
- You can bake several pizzas in succession. This may increase the baking time per pizza by approx. 1-3 minutes.
- When dough is baked, it needs to be able to expand without the surface breaking apart. This can be achieved by pricking it several times with a fork or by making a cut with a knife.
- The temperatures and times specified in the cooking table are average values. Always follow the manufacturer's instructions for pre-cooked and frozen products, too.

Baking stone

Food	Accessory/ cookware	Level	Temperature in °C	Type of heating	Cooking time in mins	Comments
Bread rolls, fresh, 50 g each	Baking stone	1	250/200		15-20[1]	

[1] Preheat the appliance to the specified temperature. Turn the temperature down to the second specified temperature when placing the food in the oven.

Food	Accessory/ cookware	Level	Temperature in °C	Type of heating	Cooking time in mins	Comments
Flatbread	Baking stone	1	210		15	The cooking time depends on the size and thickness of the flatbread.
Tarte flambée, fresh	Baking stone	1	300		3-4	Recipe tip: Traditional or with goats' cheese, Parma ham, figs and spring onion.
Tarte flambée, frozen	Baking stone	1	250		4-5	
Foccacia	Baking stone	1	210		15	Top with various ingredients, e.g. herbs, sea salt, olives, anchovies, onion, ham, tomatoes or cheese.
Multigrain bread	Baking stone	1	175		45	
Olive and tomato bread	Baking stone	1	175		45	
Pizza, fresh	Baking stone	1	275		5-8	The cooking time varies depending on the type and thickness of the dough and topping.
Pizza, frozen	Baking stone	1	230		8-10	The cooking time varies depending on the thickness of the dough. Follow the manufacturer's instructions.
Sourdough bread	Baking stone	1	250/200		50-60[1]	

[1] Preheat the appliance to the specified temperature. Turn the temperature down to the second specified temperature when placing the food in the oven.

18.14 Tips for keeping acrylamide levels to a minimum when cooking

Acrylamide is harmful to your health and is produced when you cook cereal and potato products at very high temperatures.

General information
- Keep cooking times as short as possible.
- Cook food until it is golden brown, but not too dark.
- Use large, thick pieces of food. Cooking produces less acrylamide.

Baked goods
- Set the temperature for hot air to max. 180 °C.

Biscuits
- Brush biscuits with egg or egg yolk. This reduces the production of acrylamide.
- Spread out a single layer evenly on the baking tray.

Oven chips
- Spread the chips out evenly and in a single layer on the baking tray.
- Cook at least 400 g at once on a baking tray so that the chips do not dry out.

19 Customer Service

Function-relevant genuine spare parts according to the corresponding Ecodesign Order can be obtained from Customer Service for a period of at least 10 years from the date on which your appliance was placed on the market within the European Economic Area.

Note: Under the terms of the manufacturer's warranty the use of Customer Service is free of charge.

Detailed information on the warranty period and terms of warranty in your country is available from our after-sales service, your retailer or on our website.
If you contact Customer Service, you will require the product number (E-Nr.) and the production number (FD) of your appliance.

The contact details for Customer Service can be found in the enclosed Customer Service directory or on our website.
This product contains light sources from energy efficiency class G.

19.1 Product number (E-Nr.) and production number (FD)

You can find the product number (E-Nr.) and the production number (FD) on the appliance's rating plate. You will see the rating plate with these numbers if you open the appliance door.



Make a note of your appliance's details and the Customer Service telephone number to find them again quickly.

20 Declaration of Conformity

BSH Hausgeräte GmbH hereby declares that the appliance with Home Connect functionality conforms to the basic requirements and other relevant provisions of Directive 2014/53/EU.
A detailed RED Declaration of Conformity can be found online at www.gaggenau.com among the additional documents on the product page for your appliance.

CE

Hereby, BSH Hausgeräte GmbH declares that the appliance with Home Connect functionality is in compliance with relevant statutory requirements.[1]
A detailed Declaration of Conformity can be found online at www.gaggenau.com/gb among the additional documents on the product page for your appliance.[1]

UK CA

2.4 GHz band (2400–2483.5 MHz): Max. 100 mW
5-GHz band (5150–5350 MHz + 5470–5725 MHz): max. 50 mW

	BE	BG	CZ	DK	DE	EE	IE	EL	ES
	FR	HR	IT	CY	LI	LV	LT	LU	HU
	MT	NL	AT	PL	PT	RO	SI	SK	FI
	SE	NO	CH	TR	IS	UK (NI)			
5 GHz WLAN (Wi-Fi): For indoor use only.									

AL	BA	MD	ME	MK	RS	UK	UA
5 GHz WLAN (Wi-Fi): For indoor use only.							

21 Installation instructions

Observe this information when installing the appliance.



21.1 General installation instructions

Follow these instructions before you start installing the appliance.

⚠ WARNING – Risk of injury!

The appliance is heavy.

- ▸ To move the appliance, two people are required.
- ▸ Use only suitable tools and equipment.

Sharp-edged parts may be accessible during installation.

- ▸ Wear protective gloves.

- Read this instruction manual carefully.
- Only an appliance which has been correctly installed in accordance with these installation instructions can be used safely. The installer shall be liable for damages incurred as a result of incorrect installation.
- Switch off the power supply before carrying out any work.
- Check the appliance for damage after unpacking it. Do not connect the appliance if it has been damaged in transit.
- Only a licensed professional may connect appliances without plugs. Damage caused by incorrect connection is not covered under the warranty.
- Do not lift the appliance using the door, the door handle or the bottom air output.
- When installing, observe the current, valid building regulations as well as the regional power company's regulations.

[1] Only applies to Great Britain

- Install the appliance in accordance with the installation diagram. Observe the minimum clearances.
- Installation behind cabinet doors: Suitable measures should be taken to ensure these types of doors cannot close during operation. There is a risk of overheating if the door does not remain open during operation or during cooling (fan operation).
- Before starting up the appliance, remove any packaging material and adhesive film from the cooking compartment and the door.
- The dimensions in the figures are in mm.

21.2 Planning notes

Observe the following planning notes before installing the appliance.

- The door direction cannot be reversed.
- The distance from the furniture cavity to the door panel surface is 21 mm.
- The distance from the furniture cavity to the outer edge of the door handle is 72 mm.
- Note the overhang for opening drawers next to the appliance.
- When planning a corner solution, consider a door opening angle of at least 110°.
- If you install the appliance under a hob, maintain a clearance of at least 15 mm between the underside of the hob and the top of the oven housing. Take the planning notes of the hobs into consideration, particularly for the ventilation, gas connection and the electric connection.

21.3 Appliance dimensions

You will find the dimensions of the appliance here

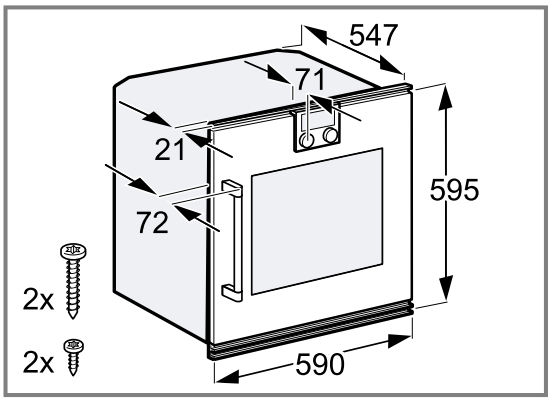

21.4 Preparing fitted units

Requirement: Fitted units must be heat-resistant up to 90 °C, and adjacent unit fronts up to 70 °C.

1. To ventilate the appliance, create a ventilation cut-out of at least 20 x 500 mm in the intermediate floor of the fitted cabinet.
2. Ensure that the mains socket is located outside of the built-in niche.
3. Carry out cut-out work on the units and then insert the appliance.
4. After making the cut-outs, remove any shavings. Shavings may impair the function of electrical components.
5. Secure any unsecured units to the wall using a standard bracket.
6. Only install the appliance high enough that the customer can remove any accessories effortlessly.

21.5 Electrical connection

In order to safely connect the appliance to the electrical system, follow these instructions.

- Ensure that there is sufficient fuse protection for the household wiring. The voltage and frequency of the appliance must match the electrical installation; see the rating plate.
- The appliance corresponds to protection class I and must only be operated with a protective earth connection.
- Fuse protection by means of B- or C-type circuit breakers is required.
- An all-pole isolating switch with a contact gap of at least 3 mm must be fitted during installation. This must remain accessible after installation.
- Appliances without a power cable must only be connected in accordance with the connection diagram. If required, install the enclosed copper bridges. The appliance may be damaged if it is not connected correctly.
- The power cable must correspond to type H05 VV-F or a higher rating.
- The yellow/green wire for the PE connection must be 10 mm longer than the other wires for the appliance.
- To achieve the 550 mm installation depth, the connection cable needs to follow the slanted edge on the lower right hand corner of the housing.

21.6 LAN connection to the home network

This appliance can be networked. You can connect the appliance to the home network using a LAN cable. The scope of delivery does not include a LAN cable.

Establishing the LAN connection

1. Before installing the appliance, insert a LAN cable into the socket on the back of the appliance.
2. Use the strain relief to secure the LAN cable in place.

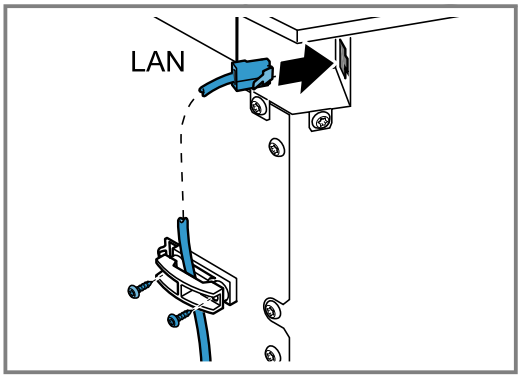

3. Connect the LAN cable to a network connection.

21.7 Installing the appliance

ATTENTION!
Sharp-edged screwdrivers may damage the control panel.
- Use a suitable screwdriver.
- Do not scratch the control panel.

1. Observe the clearances when installing in a tall unit.

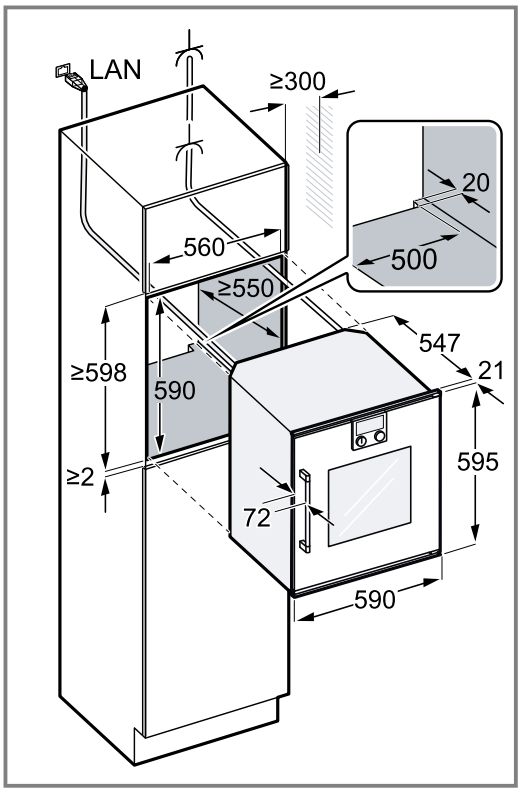

When installing 2 appliances next to each other, align both handles to the centre.

2. If there is no intermediate floor above the appliance, secure the appliance against tipping in the unit. Secure two commercially available brackets on both sides in the unit at a depth of 450 mm, 5 mm above the height of the appliance.
3. Push the appliance all the way into the built-in unit.
   – Do not kink or trap the connection cable, or route it over sharp edges.

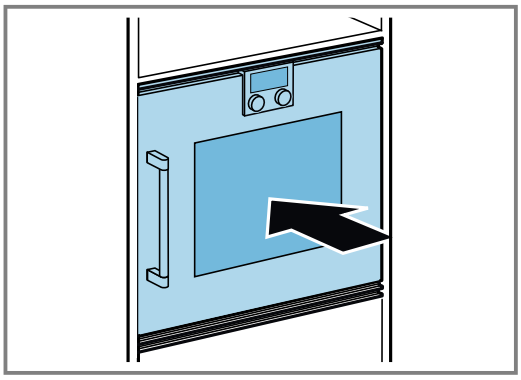

4. Centre the appliance.
   There must be an air gap of at least 2 mm between the appliance and the adjacent unit fronts.
5. Use a spirit level to adjust the appliance so that it is perfectly level.

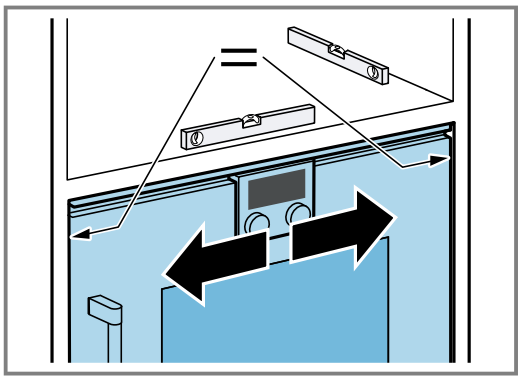

6. Open the appliance door.

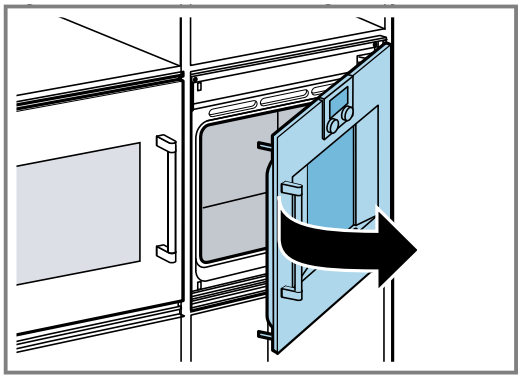

7. Secure the appliance using the enclosed screws.
   – First, secure the appliance in place in the unit using the lower screws ①.
   – Screw on the two upper screws ②.

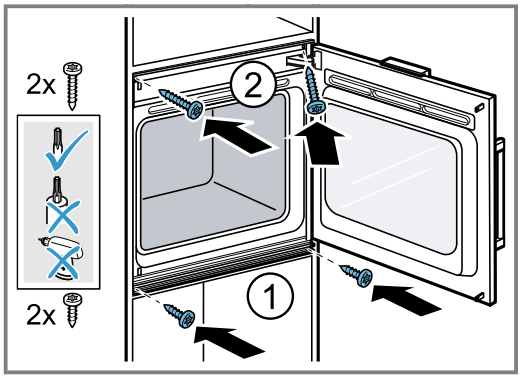

8. Remove the transit bolt from the door.

21.8 Aligning the appliance door

The appliance door is already aligned when the appliance is delivered. Alignment is not normally required. If required, you can adjust the appliance door's alignment at the hinge in order to achieve a precise gap.

Aligning the appliance door

1. Open the door.

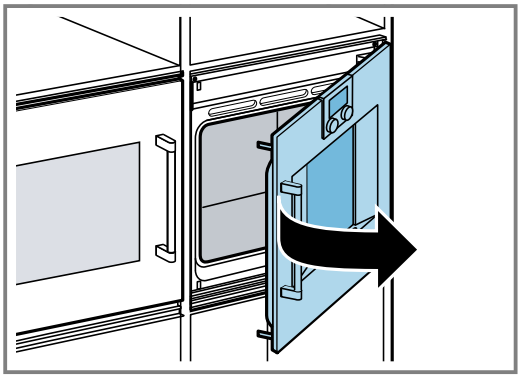

2. Undo the two screws on the bottom door hinge.

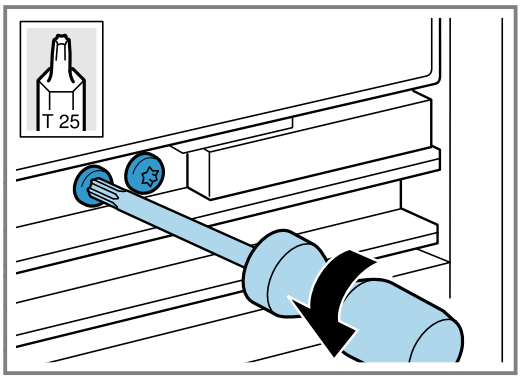

3. Adjust the door and tighten both screws.

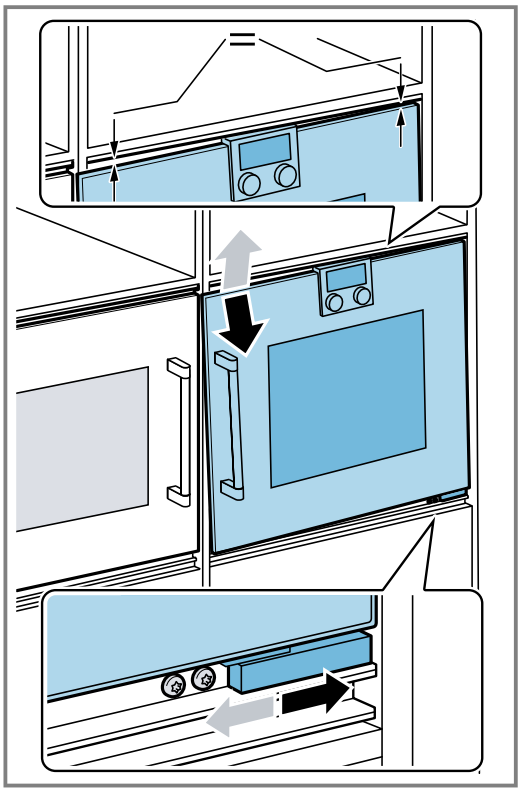

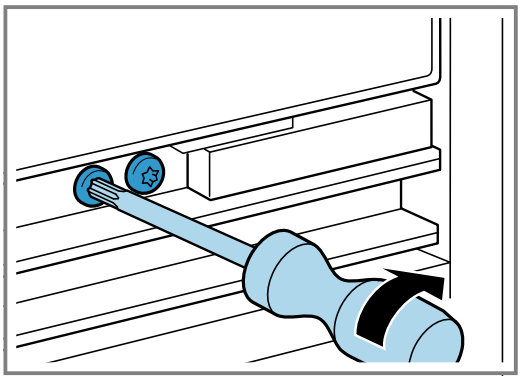

21.9 Combining the appliance with a combi-steam oven

Requirement: The combi-steam oven is installed.

1. Observe the installation instructions for the combi-steam oven.
2. For an installation depth of 550 mm, position the water hoses and the connection cable in the area of the slanted edge on the corner of the housing.

21.10 Combining the appliance with a warming drawer

ATTENTION!

Sharp edges on the appliance may damage the panel of the warming drawer.

- Do not damage the warming drawer cover when sliding the appliance in.

1. Only combine suitable appliances of the same brand and series.
2. Install the warming drawer first.
3. Follow the installation instructions for the warming drawer.

4. Slide the appliance, on the warming drawer, into the fitted cabinet.

21.11 Removing the appliance

1. Disconnect the appliance from the power supply
2. Undo the fastening screws.
3. Lift the appliance slightly and pull it out completely.

BSH Hausgeräte GmbH
Carl-Wery-Straße 34
81739 München, GERMANY
www.gaggenau.com

Valid within Great Britain:
Imported to Great Britain by
BSH Home Appliances Ltd.
Grand Union House
Old Wolverton Road
Wolverton, Milton Keynes
MK12 5PT
United Kingdom

GAGGENAU

9001832822 en (030523)