AD410040

Optional accessories

Installation Accessories

Air duct part
connector sleeve female
AD410040

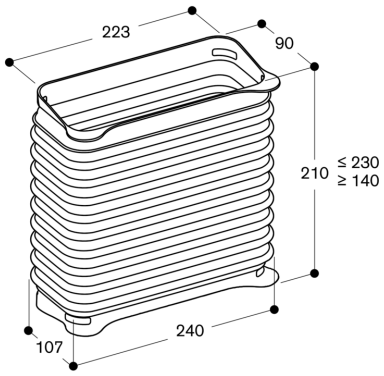

measurements in mm

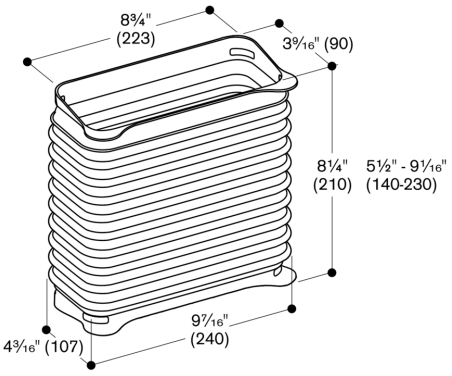

measurements in inches (mm)