AF060100

Optional accessories

AA000800:
Recirculation module w.active charcoal

AA000820:
Regenerable recirculation module

Flat kitchen hood
60 cm, Anthracite
AF060100

– Perforated stainless steel grease filters with high grease absorption rate

Highlights

Seamless integration in an upper cabinet.
Manually extendable panel to optimise the capture of the cooking vapours.
Solid aluminium frame in combination with smoked glass.
Automatic extraction for ideal performance and noise level.
Reduced user interface with haptic control.
Flush integrated LED strip featuring adjustable brightness and colour temperature.
Solid stainless steel grease filters (7 layers) with embossed stainless steel housing, dishwasher safe.

Output

Performance and noise level, output level 3/Intensive:
Air output according to EN 61591.
Sound power level according to EN 60704-3.
Air extraction:
640 / 870m³/h.
62 / 71 dB (A) re 1 pW.
Air recirculation:
575 / 735m³/h.
73 / 79 dB (A) re 1 pW.

Features

Precise buttons for on/off, power levels and light.
Sensor controlled automatic mode can be activated via Gaggenau Home Connect.
The fan and the lighting switch on/off automatically when the panel is extended/closed.
Light can be switched on separately.
Illuminance 620 lx continuously dimmable.
Neutral white LED light strip (3500 K).
Light colour in different white tones (2700 - 5000 Kelvin) can be adjusted via Home Connect.
Lamp output 6.5 W.
Fan technology with brushless DC motor (BLDC).
1 stainless steel grease filter.
Grease filter and odour filter saturation indicator via Gaggenau Home Connect.
Interval ventilation via Gaggenau Home Connect.
Easy mounting system for simple installation and alignment.

Selected digital services (Gaggenau Home Connect)

Cooktop-based ventilation control (with suitable cooktop).
Remote control and monitoring.
Remote diagnostics.

Product rating

Energy efficiency class A++ at a range of energy efficiency classes from A+++ to D.
Energy consumption 30.6 kWh/year.
Ventilation efficiency class A.
Illumination efficiency class A.
Grease filter efficiency class B.
Sound level min. 45 dB / max. 62 dB normal mode.

Planning notes

The equivalent ducting length to ensure good performance is Lmax 50 m.
Please refer to the "General planning notes" for the calculation of the equivalent ducting length.
Vario cooktops with intensive production of vapours like VR/VP/VF should be placed in the middle beneath the cooker hood (in this case air recirculation is not recommended).
Installation in a special upper cabinet:
Minimum cabinet width 60 cm.
Thickness of the wall cabinet 16 mm.
Minimum internal cabinet depth 330 mm.
Mounting brackets enclosed for installation in cabinet.
For air recirculation, an air recirculation module is required.
Easy planning and installation of the air recirculation module in the hood.
Easy access to odour filter from below.
When installing a ventilation hood with air extraction mode and a chimney-vented fireplace, the hood's power supply line needs to feature a suitable safety switch.
In air extraction a one-way flap with a maximum opening pressure of 65 Pa should be installed.
Clearance above gas appliances min. 65 cm(more than total load gas 12 kW min. 70 cm).
Clearance above electric appliances min. 50 cm.

Connection

Total connected load 240 W.
Connecting cable 1.8 m, pluggable.

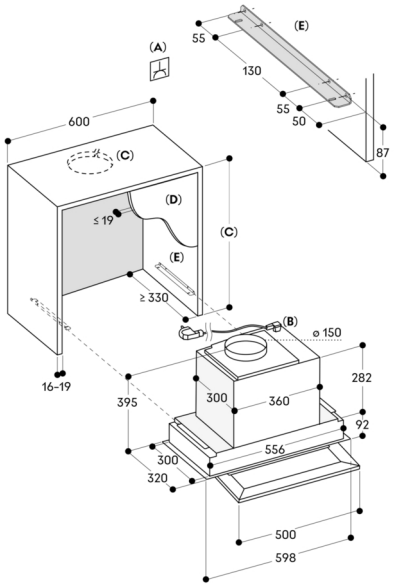

A: Accessible electrical connection
B: Connection cable 1.75 m, pluggable, depending on country

C: Depending on ventilation mode (extraction or recirculation)

D: Removable front panel
E: Mounting brackets

Measurements in mm

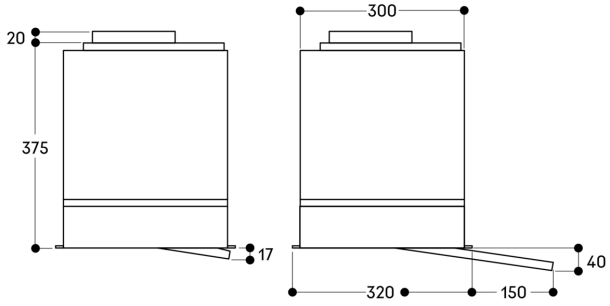

Measurements in mm

View from above

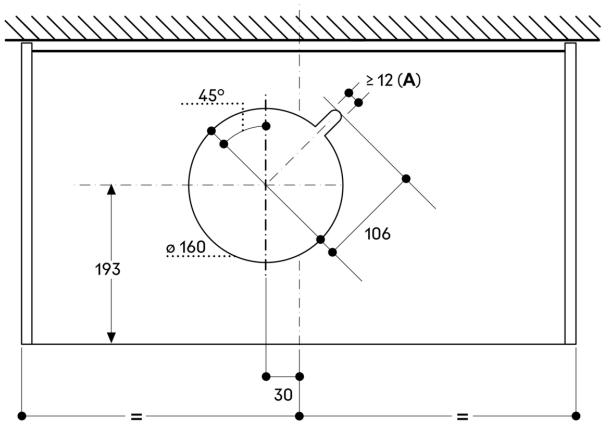

A: Cable bushing

Measurements in mm

View from above
For AA 000 800 / 820

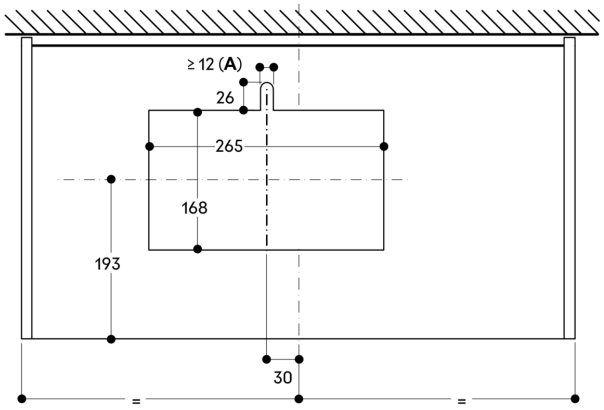

A: Cable bushing

Measurements in mm

Height limits by ventilation mode

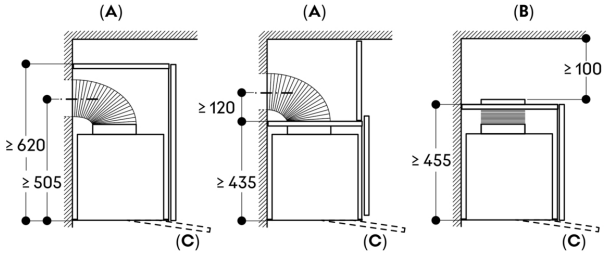

A: Extraction mode
B : Recirculation mode
C: Telescopic variant

Measurements in mm