BM454110

Optional accessories

Installation Accessories

Combi-microwave oven 400 series
60 x 45 cm, Door hinge: Right, Stainless steel behind glass
BM454110

– Handleless door / automatic door opening
– Combination of microwave, grill and oven
– Sequential operation of up to 5 modes including programming of combined operation and rest time
– Handleless door / automatic door opening / door opening via voice assistant possible

Single operation and combination of microwave, grill and oven
Sequential operation of up to 5 modes incl. programming of combined operation and rest time
TFT touch display
Panel-free appliance with surface control module
Electronic temperature control
Interior volume 36 litres

Programmes

Microwave operation with 5 output levels: 1000, 600, 360, 180, 90 W.
Oven operation with 4 heating methods:
Hot air 40 °C and from 100 °C to 250 °C, Full surface grill + hot air from 100 °C to 250 °C, Full surface grill + circulated air from 100 °C to 250 °C Full surface grill with 3 levels of intensity, maximum output 2000 W.
Heating methods with microwave output levels 600, 360, 180 and 90 W freely combinable.
15 automatic programmes with weight indication, customisable:
4 defrosting programmes 4 cooking programmes 7 combination programmes
Option to save individual recipes.

Handling

Automatic door opening.
Rotary knob and TFT touch display operation.
Clear text display.
Information key with use indications.
Side-opening door opens up to 180° angle.

Features

Innowave.
Rapid heating.
Timer functions: cooking time, cooking time end, timer, stopwatch, long-term timer (certified by Star-K).
4 rack levels.
Actual temperature display.
60 W halogen light on the side.

Safety

Thermally insulated door with triple glazing.
Triple door lock.
Child lock.
Safety shut-off.
Cooled housing with temperature protection.

Cleaning

Hygienic stainless steel interior with glass ceramic base.
Interior back wall with catalytic coating.

Planning notes

Door hinge not reversible.
Plan the niche without back wall.
The door panel surface of the appliance extends 47 mm from the furniture cavity.
If the handle (optional accessory) is retrofitted, the outer edge of the door handle extends 94 mm from the furniture cavity.
Consider the overhang, incl. the door handle where applicable, when planning to open drawers next to the appliance.
When planning a corner solution, pay attention to the side-opening door and the minimum required distance to the wall.
The mains socket needs to be planned outside of the built-in niche.

Connection

Total connected load 3.1 KW.
Connection cable 1.5 m without plug.

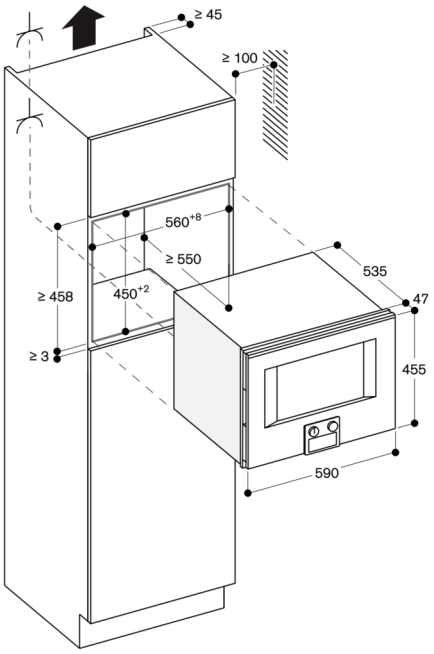

Socket

measurements in mm
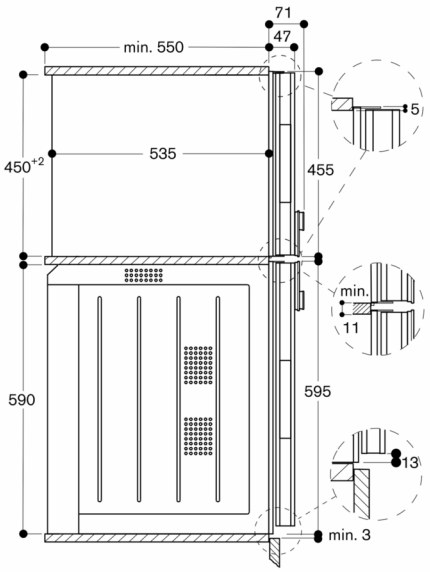
Side view of BM 454/455 above BO