BO421112

A

1 x enamel baking tray,suit. pyrolitic clean
1 x glass pan
1 x grill shelf

GN340230:
Gastronorm roaster GN 2/3

BA016105:
1 telescopic shelf rail, for 60cm oven

BA026115:
Baking tray, for 60cm oven

BA036105:
wire rack, for 60cm oven

BA046117:
Glass tray, for 60cm oven

BA056115:
Heating elem. 230 V, for 60cm oven

BA056133:
Baking stone for 60 cm oven

BA226105:
Grill tray, for 60cm oven

BS020002:
Set of 2 pizza paddles

Oven 400 series
60 x 60 cm, Door Hinge: left, Stainless steel behind glass
BO421112

Handleless door / automatic door opening
Pyrolytic system
9 heating methods, with baking stone function
TFT touch display
Panel-free appliance with surface control module
Electronic temperature control from 50 °C to 300 °C
Net volume 76 litres

Heating methods

Hot air.
Eco hot air. Top + bottom heat. Top heat. Bottom heat. Hot air + bottom heat. Full surface grill + circulated air. Full surface grill. Baking stone function.

Handling

Automatic door opening.
Rotary knob and TFT touch display operation.
Clear text display.
Option to save individual recipes.
Information key with use indicators.
Side-opening door opens up to 180° angle.

Features

Baking stone socket.
Actual temperature display.
Rapid heating.
Timer functions: cooking time, cooking time end, timer, stopwatch, long-term timer (certified by Star-K).
60 W halogen light on the top.
Enamelled side shelf supports with 4 tray levels, pyrolysis-safe.

Selected digital services (Home Connect)

Remote control and monitoring.
Recipes.
Home network integration for digital services (Home Connect) either via cable connection LAN (recommended) or wireless via WiFi.
The use of the Home Connect functionality depends on the Home Connect services, which are not available in every country. For further information please check: home-connect.com.

Safety

Thermally insulated door with quadruple glazing.
Child lock.
Safety shut-off.
Cooled housing with temperature protection.

Cleaning

Pyrolytic system.
Gaggenau enamel.
Heated catalyser to clean the oven air.

Planning notes

Door hinge not reversible.
The facade of the appliance extends 47 mm from the furniture cavity.
If the handle (optional accessory) is retrofitted, the outer edge of the door handle extends 94 mm from the furniture cavity.
Consider the overhang, incl. the door handle where applicable, when planning to open drawers next to the appliance.
When planning a corner solution, pay attention to the side-opening door and the minimum required distance to the wall.
To achieve the 550 mm installation depth, the connection cable needs to follow the slanted edge on the lower right hand corner of the housing.
The mains socket needs to be planned outside the built-in niche.
The LAN port can be found at the back on the upper right side.

Connection

Energy efficiency class A at a range of energy efficiency classes from A+++ to D.
Total connected load 3.7 KW.
Plan a connection cable.
Power consumption standby/display on 0.7 W.
Power consumption standby/display off 0.5 W.
Power consumption standby/network 1.4 W.
Time auto-standby/display on 20 min.
Time auto-standby/display off 20 min.
Time auto-standby/network 20 min.
Plan a LAN cable.

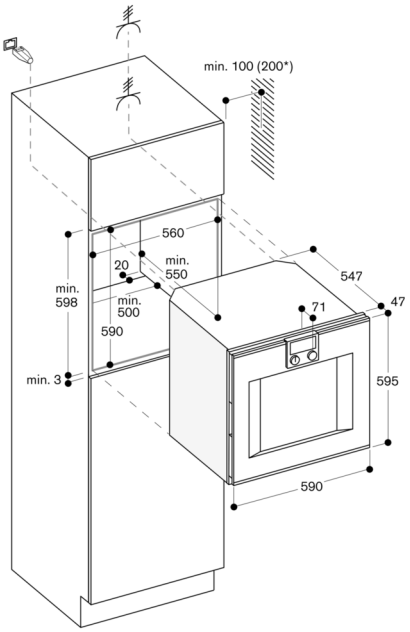

* 200 mm in conjunction with BA 016